City of Bee Cave
Transportation Criteria Manual
(Updated Q2 2022)

PREFACE

The City of Bee Cave's Engineering Criteria Manuals (ETM) were promulgated to administer and implement the City's Unified Development Code (UDC) in providing concise and comprehensive criteria for proper planning, design and coordination of all facilities applicable within the City of Bee Cave.

The guidelines and criteria presented in the Transportation Criteria Manual provide a foundation or starting point for rational engineering design decisions. The standards contained herein are based largely upon the guidelines and policies promulgated by the City of Austin, Institute of Transportation Engineers (ITE), and the American Association of State Highway and Transportation Officials (AASHTO).

The Transportation Criteria Manual includes a classification system for the City of Bee Cave, street characteristics and definitions of the various classes of streets, tabulation of design criteria and guidelines and schematic details of proposed street cross sections.

Deviations in regard to functional classifications, design criteria and recommendations as set forth in this document should be warranted based on sound engineering principles. Deviations may be sought where warranted by social, economic or environmental impacts. All deviations from these guidelines including horizontal alignments, vertical grades, pavement widths, corner radii, median breaks, driveway and sidewalk designs must be approved by a Professional Engineer as designated by the City Engineer unless specific or joint authority is given to another stated designee by this document or by City Ordinance. These decisions shall be final except as otherwise designated by ordinance.

The design criteria established in the Transportation Criteria Manual affect the review and approval of subdivision plats, zoning change applications, street construction plans, street rights of way dedications and other development related plans and plats. The design criteria are based on the characteristics of urban transportation demands and the various levels of land development. Analyzed together they set forth Bee Cave's roadway development criteria.

The legal authority for enforcement of this document is derived from the Bee Cave Unified Development Code (UDC). Any changes to this document shall be made in accordance with the promulgation procedure outlined in Section the Bee Cave UDC.

.

TABLE OF CONTENTS

SECTION 1. DESIGN CRITERIA 7

1.1 CLASSIFICATIONS AND FUNCTIONAL CHARACTERISTICS 7

1.1.1 General Street Classifications 7

1.1.2 7

1.1.2 Functional Characteristics 7

1.2 GEOMETRIC DESIGN CRITERIA 7

1.2.1 General Design Criteria 7

1.2.2 Classification Design Criteria 20

1.2.3 Additional Standards 26

1.2.4 HIGHWAYS 28

SECTION 2. TRAFFIC IMPACT ANALYSIS 29

2.1 GENERAL 29

SECTION 3. COMPUTERIZED PAVEMENT DESIGN 29

3.1 GENERAL 29

SECTION 4. SIDEWALKS AND CURB RAMPS 29

4.1 GENERAL 29

4.2 SIDEWALK REQUIREMENTS 29

4.2.1 General Requirements 29

4.2.2 Location Criteria for Streetscape Furnishings 29

4.2.3 Nonconventional Sidewalks 30

4.2.4 Sidewalks on Bridges 31

4.2.5 State Facilities 31

4.3 CURB RAMPS 31

SECTION 5. DRIVEWAYS 33

5.1 GENERAL 33

5.2 TYPES OF DRIVEWAYS 33

5.2.1 Type I 33

5.2.2 Type II 33

5.2.3 Type III 33

5.3 DESIGN CRITERIA 33

5.3.1 General 33

5.3.2 Criteria for Various Types of Driveway 36

SECTION 6. CLEAR ZONES AND GUARD FENCES 40

6.1 GENERAL 40

6.2 CLEAR ZONES 40

6.2.1 Transportation Guidelines for Landscaping 40

6.3 GUARD FENCES AND RAILING 45

6.3.1 Pedestrian and Separator Railing....45

6.3.2 Bridge Railing....46

SECTION 7. MULTI-USE PATHS 47

7.1 GENERAL 47

7.2 FUNCTIONAL CHARACTERISTICS 47

7.2.1 Placement, Composition, & Design Criteria 47

SECTION 8. TRAFFIC CONTROL 51

8.1 GENERAL 51

SECTION 9. PARKING 51

9.1 GENERAL 51

9.2 PARKING LOT DESIGN 51

9.3 LOADING 53

9.4 QUEUING 55

9.5 INTERNAL CIRCULATION 55

9.6 MIXED-USE PARKING (SHARED USE PARKING) 56

9.6.1 Definitions 56

9.6.2 General Requirements 57

9.6.3 Methodology....57

9.6.4 Design Considerations 58

9.7 CALCULATION OF PARKING REQUIREMENTS 59

9.7.1 Change Of Occupancy 59

9.7.2 Expansion Or Addition 59

9.7.3 Multiple Uses Within A Structure 60

SECTION 10. STRUCTURES IN THE RIGHT OF WAY AND IN EASEMENTS 61

10.1 GENERAL 61

10.2 ABBREVIATIONS 61

10.3 RETAINING WALLS 61

10.3.1 Definitions 61

10.3.2 Use of Standard/Non-Standard Walls 63

10.3.3 General Requirements 63

10.3.4 Wall Location and Layout....64

10.3.5 Structural Requirements....65

10.3.6 Material Requirements 65

10.3.7 Internal Drainage 65

10.3.8 External (Surface) Drainage 66

10.3.9 Maintenance Provisions 66
10.3.10 Safety Provisions 66
10.3.11 Warning Devices 66
10.3.12 Supplemental Construction 67
10.3.13 Geotechnical Information 67
10.3.14 Construction Drawings 67
10.3.15 Technical Specifications 68
10.3.16 Shop Drawings/Materials Tests 68
10.3.17 Changes in Design or Materials 68
10.3.18 License Agreements/Construction Waivers 68

10.4 BRIDGES 68

10.4.1 Structural Requirements 68
10.4.2 Material Requirements 69

10.5 CULVERTS/STORMWATER DRAINAGE PIPE 69

10.5.1 Structural Requirements 69
10.5.2 Material Requirements 69

SECTION 11. RULES AND DESIGN MANUAL FOR SMALL CELL NETWORK FACILITIES IN THE RIGHT-OF-WAY 70

11.1 PURPOSE 70

11.2 GENERAL PROVISIONS: NETWORK NODES, NODE SUPPORT POLES, AND TRANSPORT FACILITIES WITHIN PUBLIC RIGHT-OF-WAY 70

11.2.1 Network Provider Responsibilities 70
11.2.2 Restrictions on Placement 71
11.2.3 Size Limitations of Equipment 71
11.2.4 No Overhead Lines 72
11.2.5 Generators Not Allowed 72
11.2.6 Tree Maintenance 72
11.2.7 Signage 72
11.2.8 Repair 72
11.2.9 Graffiti Abatement 73
11.2.10 No Interference and No Liability 73
11.2.11 Abandoned Facilities 73
11.2.12 Removal Required by City 73
11.2.13 Removal or Relocation by Network Provider 73
11.2.14 Removal or Relocation Required for City Project 73
11.2.15 No City Affiliation 74
11.2.16 Restoration 74
11.2.17 Safety 74
11.2.18 Radio Frequencies 74
11.2.19 Facility Inventory 74
11.2.20 Unauthorized Network Nodes and Transport Facilities 75
11.2.21 Installation 75

11.2.22 Electrical Supply 75

11.3 NETWORK NODE 76

11.4 COLLOCATION ON A TRAFFIC POLE 76

11.4.1 Eligibility and Application 76

11.4.2 Traffic Pole Load Analysis 78

11.4.3 Inspections....78

11.5 NODE SUPPORT POLES AND ASSOCIATED FACILITIES 78

11.5.1 Application for Installation of Node Support Pole within the Right-of-Way....78

11.6 TRANSPORT FACILITIES 79

11.6.1 Application for Transport Facility 79

11.7 DESIGN STANDARDS 80

11.7.1 Design Standards City-Wide....80

11.8 EXHIBIT A – COLLOCATION ON A TRAFFIC POLE 82

SECTION 12. APPENDICES 89

APPENDIX A: TURNING MOVEMENT TEMPLATES 89

APPENDIX B: FIGURES AND DIAGRAMS 97

12.1 SECTION 1 97

12.2 SECTION 4 111

12.3 SECTION 5 113

12.4 SECTION 6 117

12.5 SECTION 7 123

12.6 SECTION 9 127

DESIGN CRITERIA

1.1 CLASSIFICATIONS AND FUNCTIONAL CHARACTERISTICS

1.1.1 GENERAL STREET CLASSIFICATIONS

Street classifications are used to categorize streets according to their functions. There are three (3) major street classifications for urban roadways: local streets, collector streets and arterial streets. In addition, functions and design standards for alleys are also included in this document.

Each of the three (3) major classifications when appropriately planned, combine to create an effective overall street network as illustrated in the City of Bee Cave's adopted Thoroughfare Plan.

1.1.2 FUNCTIONAL CHARACTERISTICS

The following reflect general functional characteristics for each street classification. In addition, Figure 1-2 contained in Appendix B of this manual illustrates the access versus mobility characteristic as it pertains to each street classification.

A. Alley.

An alley is a passageway designed primarily to provide access to or from the rear or side of property otherwise abutting on a public street.

B. Local Street.

The primary function of a local street is to serve abutting land use and traffic within a neighborhood or limited residential district. A local street is not generally continuous through several districts.

C. Collector Street.

The primary function of a collector street is to intercept traffic from intersecting local streets and expedite the movement of this traffic in the most direct route to an arterial street or other collector street.

D. Arterial Street.

Arterial streets are designed to carry high volumes of through traffic. Access is usually limited to intersections and major driveways. Arterial streets serve as a link between major activity centers within the urban area.

The functional classification for each street shall be identified upon the time of the submittal of preliminary plans.

1.2 GEOMETRIC DESIGN CRITERIA

1.2.1 GENERAL DESIGN CRITERIA

A. Grades.

The following design criteria is based on material from the Institute of Transportation Engineers Report, Guidelines for Urban Major Street Design, 1983, Sections 6.1, 6.3 and 6.4.

Grades have an economic effect on vehicle operating costs and time losses and they also affect highway capacity and safety.

The grade line is a series of straight lines connected by parabolic vertical curves to which the straight lines are tangent. Under all conditions this line should be smooth flowing. Short, choppy grades are unsightly and disrupt operating conditions.

1. Maximum Grades.

   Maximum grades are determined primarily by the operation characteristics of vehicles on grades. Driving practices with respect to grades vary greatly, but nearly all passenger cars can readily negotiate upgrades as steep as seven (7) to eight (8) percent. Passenger vehicle speeds decrease progressively with steeper grades.

   The effect of grades on bus or truck speeds is most pronounced. On upgrades, the maximum speed a bus or truck can maintain is dependent on the grade length and steepness, and on the ratio of the gross vehicle weight to engine horsepower. This will not only affect speed but may also be a pronounced effect on the capacity of the street where there are appreciable bus and/or truck volumes. Table 1-7 indicates maximum permissible grades. However, such grades should be used infrequently.

   The maximum gradient range for roadways carrying bus traffic is six (6) to eight (8) percent. (Urban Public Transportation: Systems and Technology, Vukan R. Vuchic. Englewood Cliffs, NJ: Prentice-Hall, 1981). To adequately exploit the travel time and speed advantage of an exclusive bus lane, the maximum recommended grade for a high-occupancy vehicle (HOV) lane or busway is four (4) percent (Institute of Transportation Engineers, Transportation and Traffic Engineering Handbook, 2nd ed. Englewood Cliffs, NJ: Prentice-Hall, 1982).

2. Minimum Grades.

   Minimum grades are governed by drainage conditions. With curbed pavements, longitudinal grades should be provided to facilitate surface drainage. A minimum grade of 0.4 percent is used.

3. General Controls for Vertical Alignment.

   The following are general design controls which should be addressed in determining vertical alignments:

   - The grade line should be smooth flowing.
   - The "roller coaster" type profile should be avoided.
   - Undulating grade lines should be appraised for their effect upon traffic operations.
   - A broken-back grade line (successive vertical curves in the same direction) generally should be avoided.
   - It is desirable to reduce the grade through intersections on roadways with moderate to steep grades.
   - A sag vertical or flat grade is desirable in advance of such features as channelizations and ramp takeoffs in order to provide good visibility.
   - Steep downgrades should be avoided, whenever practicable, at the approach to traffic signals and stop signs.

4. Vertical Curves.

Vertical curves should be simple in application and should result in a design that is safe, comfortable in operation, pleasing in appearance and adequate for drainage.

For simplicity, the parabolic curve with an equivalent axis center on the vertical point of intersection is recommended in roadway profile design (see Figure 1-3 contained in Appendix B of this manual).

Figures 1-4 and 1-5 contained in Appendix B of this manual indicate the length of vertical curve in relation to algebraic difference in grades necessary to maintain safety and comfort for crest vertical curves and sag vertical curves.

Maximum grade breaks of 0.8 percent or less may be used without a vertical curve.

Note that sight distance required from intersecting streets or driveways along vertical curves is not addressed in Figures 1-3, 1-4 and 1-5 contained in Appendix B of this manual. An intersecting street or driveway may not be appropriate along a vertical curve when required sight distance from side street or driveway is not attainable. If it is essential that a side street or driveway intersect the main street along a vertical curve, then it may be necessary to reduce the vertical curve so that necessary sight distance is available. Horizontal and vertical alignments should not be designed independently. They complement each other and poorly designed combinations can spoil the good points and aggravate the deficiencies of each. Horizontal alignment and profile are among the more important design elements of a roadway.

B. Minimum Horizontal Radii.

The following design criteria is based on material from the American Association of State Highway and Transportation Officials (AASHTO) Manual, A Policy on Geometric Design of Highways and Streets, 6th Edition (2011).

The minimum radius of a roadway is directly related to a roadway's design speed, superelevation and side friction factor.

The 1984 AASHTO Manual, Figure III-17, "Maximum Safe and Comfortable Speed for Horizontal Curves on Low-speed Urban Streets," was utilized in establishing the following radii:

For a superelevation (e) = -0.02, typical for normal crown

A design speed of:

25 mph relates to a minimum allowable radius of 180 ft.

30 mph relates to a minimum allowable radius of 300 ft.

35 mph relates to a minimum allowable radius of 470 ft.

40 mph relates to a minimum allowable radius of 725 ft.

From 1984 AASHTO Manual, Figure III-7, "Side Friction Factors for Rural Highways and High-speed Urban Streets,"

A design speed of:

45 mph relates to a side friction factor (f) of 0.145

50 mph relates to a side friction factor (f) of 0.140

The minimum safe radius (R) is calculated from the formula

$R=V^2/[15(e+f)]$ (eq. 1-1)

For design speed (V) = 45 mph,

$R=(45^2)/[15(-0.02+0.145)]$ = 1,080, say 1,000 feet

For design speed (V) = 50 mph,

$R=(50^2)/[15(-0.02+0.140)]$ = 1,389, say 1,400 feet

The above values for the minimum horizontal radii are reflective of the standards set forth in this document.

Superelevation rate, "e" may be varied thereby resulting in different values for "R" (minimum centerline radius). Changes in the above values for "e", however, should lend consideration to intersecting cross street designs. Tangent lengths between curves may also need to be extended to provide for proper superelevation runoff.

C. Cross Slope.

The following design criteria were adapted from the American Association of State Highway and Transportation Officials (AASHTO) Manual, *A Policy of Geometric Design of Highways and Streets*, 2001, Chapter IV.

On two-lane roadways that are crowned at the center, the accepted rate of cross slope ranges from 1.5% to 2%. When three or more lanes are inclined in the same direction on multilane roads, each successive pair of lanes or portions thereof that are positioned away from the first two lanes at the crown may have an increased slope. The two lanes adjacent to the crown line should be pitched at the normal minimum slope, and on each successive pair of lanes or portion thereof outward, the rate may be increased by 0.5% to 1.0%. Therefore, the minimum lane cross slope shall be 1.5%, while the typical lane cross slope shall be 2%. The maximum cross slope for outside lanes of multilane roads or streets shall be 3%.

Use of cross slopes greater than 2% on roads or streets with a central crown line is not desirable. In passing maneuvers, drivers cross and recross the crown line and negotiate a total rollover or cross slope change of over 4%. The reverse curve path of the passing vehicle causes a reversal in the direction of centrifugal force, which is further exaggerated by the effect of the reversing cross slopes. Trucks with high centers of gravity crossing over the crown line are caused to sway from side to side, which at times may be difficult to control. Therefore, the maximum algebraic difference between cross slopes in adjacent lanes, main lanes and auxiliary lanes shall be 4% for a crown or crest slope break.

On roadway section that incorporates median islands, the difference in curb heights between the two interior curb lines may vary. In the area of intersections, median openings or possible median openings, the slope between the two interior curb tops should be no more than 2%. Designs which utilize greater slopes will be individually reviewed by City staff. Waivers may be approved for locations where drainage, landfill or environmental issues may require greater slope. Median openings are to be held to the same standard as intersections because driveway connections may be made to produce a three or four-legged intersection.

D. Intersection Design.

The following design criteria was adapted from the Institute of Transportation Engineers reports, Recommended Guidelines for Subdivision Streets, Section 2.05 and Guidelines for Major Street Design , Section 9.5. This section lends guidance for proper intersection design regarding proper roadway alignments in the intersection area.

1. Vertical Alignment within Intersection Area.

   Intersection areas should be designed with a flat grade. In the more difficult terrains, this becomes economically impractical.

   The design speed for the major street at any intersection shall be maintained through the intersection approaches. The minor street may be designed with a change in grade based on reduced design speeds between the maximum grade in the approach and the cross-slope of the intersected street not to exceed eight (8) percent for local streets and six (6) percent for collector streets. The change in grade shall be accomplished by means of a vertical curve of length equal to the minimum length for that approach for that intersection type as indicated in Table 1-7.

2. Horizontal Alignment within Intersection Area.

   The horizontal approach to an intersection should be tangent for a length of 50-100 feet (see Table 1-7). Note that these tangent lengths are minimum. Longer tangents are highly desirable. The tangent distance is measured from the curb line of one (1) street to the first point of curvature on the intersecting street. In this regard, radii greater or equal to 1000 feet may be considered tangent.

   Where driveways are not limited to right in and right out movements, requirements for local streets (as indicated in Table 1-7) should apply. It is desirable for all intersections to meet at approximately a 90-degree angle. However, necessary sight distance for streets intersecting from the outside of a curve is generally attainable. Skewed intersections should be avoided and in no case should the angle be less than 80 degrees or greater than 100 degrees. Studies have shown that skewed intersections have generally higher accident rates than those intersecting at 90 degrees. Desirable alignments will also provide for increased visibility of traffic control devices such as stop signs or yield signs and will also provide increased visibility of cross traffic.

3. Minimum Curb Radius.

   As curb radius is increased, paving costs and intersection area required for a pedestrian to traverse are increased and higher turning speeds are encouraged. Substandard radii result in unnecessary lane encroachment and increased traffic conflict and accident potential. Reasonable design values of 15 feet are recommended for intersection radii of two (2) local streets, based on curb clearance of three (3) feet and without lane encroachment for a typical width street, using the AASHTO design passenger vehicle. This design will also accommodate garbage trucks and moving vans with wide swings. An increased radius of 20 feet for the local-collector or collector-collector intersection is predicated upon a desire to slightly improve the maneuverability of a vehicle in entering or leaving the collector. A collector intersection with an arterial street should have a 25-foot radius. An arterial-arterial intersection should have a 30-foot radius.

4. Minimum Centerline Offset of Adjacent Intersection.

   Several studies of intersection design types have shown T-type intersections to be far safer than cross-type. Extensive use of T intersections in residential subdivisions is strongly recommended. One disadvantage, however, is "corner cutting" when inadequate offset exists between adjacent intersections. To reduce this hazardous practice, offsets of at least 150 feet between center lines

are required. In the case of two (2) collector-street intersections, this offset shall not be less than 300 feet in order to allow for left-turn storage between intersections.

Offset intersections have disadvantages when one (1) or both such streets is a collector intersecting an arterial street, if volumes will be such to warrant traffic signals. Operations at such locations are more complicated than those for normal cross-type intersections. Therefore, other design solutions should be sought if signalization might otherwise be required. When offset intersections are used at an arterial street, they should be located to avoid conflicting left turns (this is especially important where two (2) way, left-turn lanes are to be provided or where left-turn slots are used in a fairly narrow median). Such left-turn conflicts exist when an intersection offsets to the right rather than to the left.

The distance between intersection offsets is measured from the center line intersection of one (1) intersecting roadway and the centerline intersection of the next intersecting roadway, measured along the centerline of the intersected roadway. Multileg intersections [over four (4)] are undesirable from the control and safety standpoint.

5. Drainage Structures.

The location of drainage structures, inlets, catch basins, etc., should be consistent with the intended use of the roadway and in accordance with the Drainage Criteria Manual.

Inlets or catch basins should not be located within the corner curb return or within ten (10) feet from the point of curvature of the curb return. Clearance is needed to allow space for streetlights, street name signs, utility poles, pedestrians, sidewalk ramps, etc.

At intersections which have valley drainage, the crowns of the intersecting streets will culminate in a distance of 40 feet from the intersecting curb lines unless otherwise noted on the construction plans. Inlets on intersecting streets shall not be constructed within 50 feet of the valley drainage.

Valley gutters should not be designed across streets with collector or higher classification.

6. Sight Distance.

Refer to Chapter 9 – Section 5.2 of the 2011 AASTO Manual (A Policy on Geometric Design of Highways and Streets) for intersection sight distance criteria and required analysis. During the construction plan/site plan review process, the City may request sight triangle analyses, in accordance with this chapter, for any designed intersection of both private drives/streets and public streets.

7. Median Design at Intersections.

End treatment of medians at intersections should be designed to accommodate the design vehicle turning at a reasonable rate of speed. Semicircular radii may be used on the noses of medians up to six (6) feet wide. Bullet-nosed medians should be used for medians of greater width. A minimum 50-foot control radius or a 75-foot control radius is required as stated in Table 1-2. Figures 1-7 and 1-8 contained in Appendix B of this manual illustrate examples of providing adequate curves at the medians.

TABLE 1-2 REQUIRED CONTROL RADIUS		
STREET CLASSIFICATIONS		
MAJOR STREET	MINOR STREET	CONTROL RADIUS
Major Arterial	Major Arterial	75’
Major Arterial	Minor Arterial	75’
Major Arterial	Primary Coll., Divided	75’
Major Arterial	Collectors, Undivided	50’
Major Arterial	Local Streets*	50’
Minor Arterial, Divided	Minor Arterial	75’
Minor Arterial, Divided	Primary Coll., Divided	75’
Minor Arterial, Divided	Collectors, Undivided	50’
Minor Arterial, Divided	Local Streets*	50’
Minor Arterial, Undivided	Primary Coll., Divided	75’
Primary Coll., Divided	Primary Coll., Divided	50’
Primary Coll., Divided	Collectors, Undivided	50’
Primary Coll., Divided	Local Streets	50’
* Local streets should not generally be designed to intersect with arterial streets.		

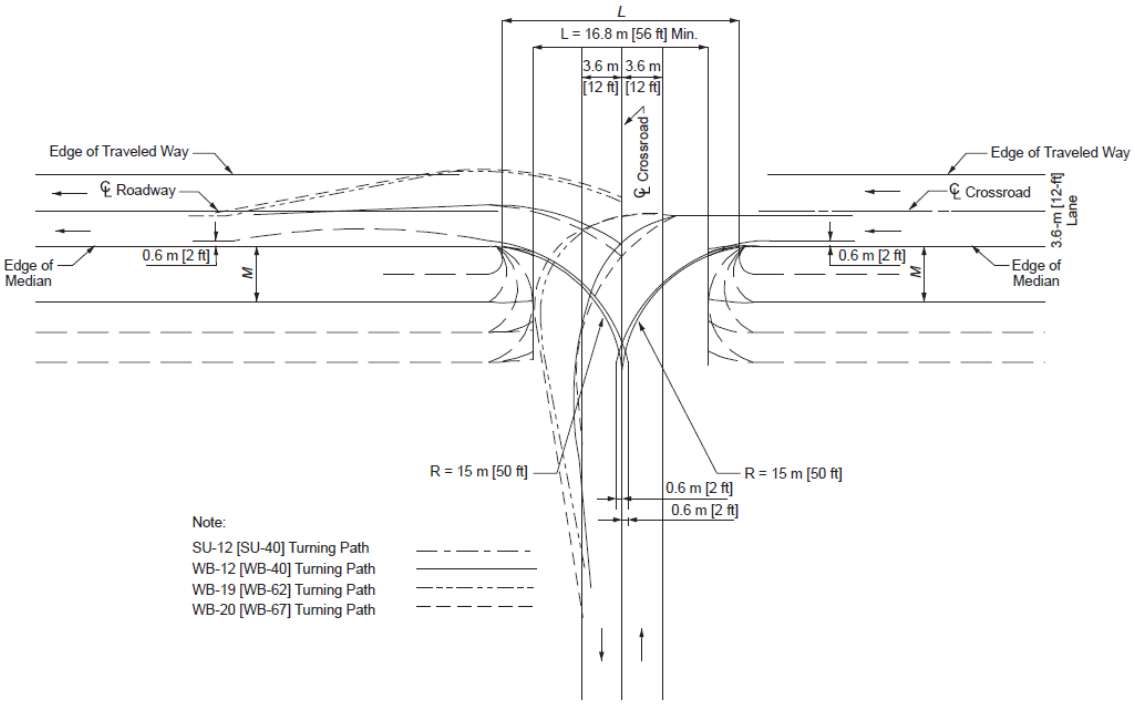

Minimum Design of Median Openings (SU-9 [SU-30] Design Vehicle, Control Radius of 50 ft

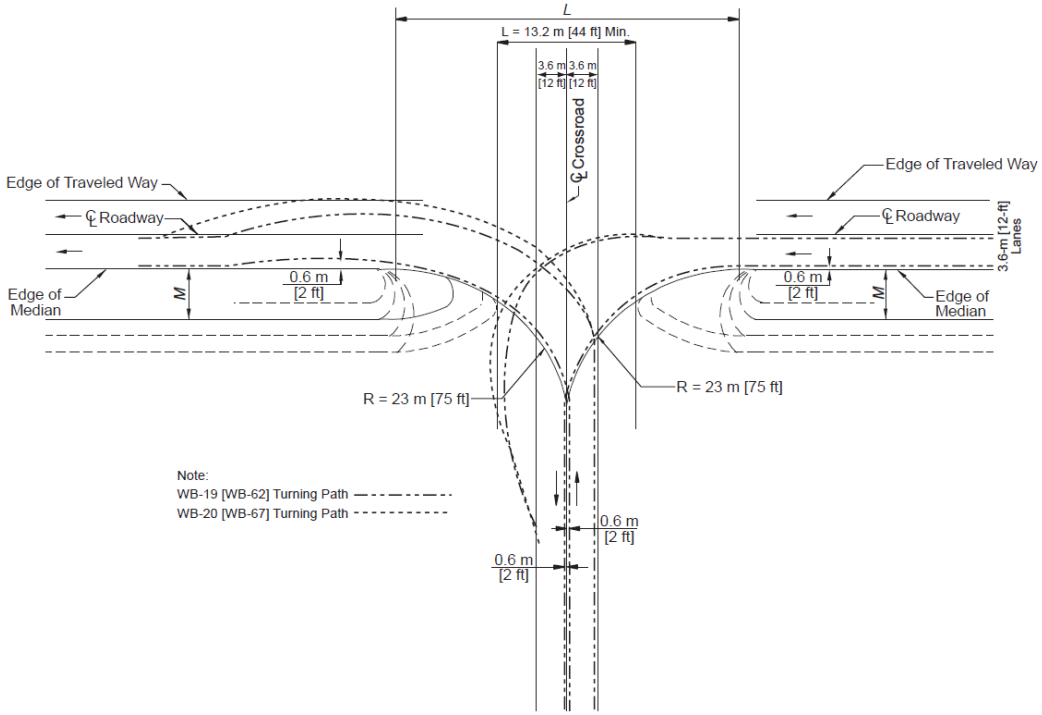

Minimum Design of Median Openings (WB-12 [WB-40] Design Vehicle, Control Radius of 75’

E. Tapers.

Refer to Chapter 9 – Section 7.1 – 7.3 of the 2011 AASTO Manual (A Policy on Geometric Design of Highways and Streets) for design standard and criteria for approach and departure tapers, bay tapers, acceleration/deceleration lane, departure tapers for left-turn bays, acceleration/deceleration lanes, through-lane tapers, tapers on horizontal curves.

F. Median and Median Breaks.

The following design criteria was adapted from the Institute of Transportation Engineers report, Guidelines for Urban Major Street Design, 1983, Sections 7.1 through 7.4. and Section 12.5.

1. Function.

A median is that portion of a divided highway separating the traveled way for traffic in opposite directions. Medians or two (2) way left turn lanes (2-WLTL) should be considered for all major urban streets of four (4) or more lanes.

Medians can provide major benefits to traffic operations on the route. Curbed medians can provide space for traffic control devices, for storage of left-turn and/or U-turn traffic. Flush medians can also provide a recovery area for out-of-control vehicles and an emergency stopping place for disabled vehicles. Some median designs can reduce headlight glare and serve as a refuge area for pedestrians and bicyclists. Where sufficient width is provided, medians may allow for future expansion of the through roadway. Good median design can smooth traffic flow and reduce conflicts.

Other functional and urban design values may be enhanced by medians. Wider medians can provide a location for drainage systems, lighting, utilities and other roadway facilities. A well-designed median can lend an orderly and attractive character both to the neighborhood and to the street that it serves.

An eight (8) to 20-foot curbed median often represents a good trade-off of operational advantages and disadvantages, if used for major streets on new alignment or through undeveloped areas and where access limitations are practical (reverse lot frontage subdivisions or combined access for direct connection tracts). With crossover access spacings of 600 to 1,000 feet, including left-turn bays, a balance can be struck between efficient service to through traffic and secondary service to abutting development.

Wider roadways requiring three (3) lanes in each direction, resulting in seven (7) lanes if used-with the 2-WLTL concept, can produce severe problems for pedestrian crossings. The unprotected width to be traversed can be unsafe at local or mid-block locations and can restrict traffic signal efficiency. Where such large numbers of lanes are needed, curbed medians may be warranted.

2. Types.

Medians may be depressed, raised or flush with respect to their adjacent traveled way. Depressed medians may be edged with raised curbs, or they may slope from the edge of the roadway directly. Often sections wider than 16 feet are depressed to collect drainage. Side slopes of 10:1 (6:1 minimum) are preferred to allow for vehicle recovery. Flush medians are typically narrow and paved. They do not prevent access to adjacent property and serve the purpose of separating opposing flows at less cost. Raised medians may be preferred for access control and

landscaping purposes where drainage is not a problem. Raised medians also provide a positive visual barrier which prevents erratic cross-traffic movements.

3. Median Width.

The width of a median is its most important geometric design consideration. Table 1-3 indicates widths necessary to accomplish certain functions, based on the passenger vehicle for primary design of crossing protection and U-turns (see Figures 1-13 through 1-18 in Appendix B of this manual for various median applications).

TABLE 1-3
MEDIAN WIDTHS (FOC TO FOC)

Function	Width (feet)
Separation of Opposing Traffic	6*
Pedestrian Refuge and Space for Traffic Control	16
Left-Turn, Speed-change and Storage	16
Crossing/Entering Vehicle Protection	23
"U"-Turns, speed change and storage	23
Channelized "T", speed-change and storage	23 - 30
* Cannot accommodate left-turn lanes, hence, such turns must be made from the through lanes.	
Source: City of Austin, Department of Public Works and Transportation Based on ITE, Guidelines for Urban Major Street Design	

4. Median Break Spacing.

The fewer driveways on a major, urban street, the more effectively it will serve its primary function. Spacings should be maintained between driveways and intersections appropriate to the character of the driveway and roadway.

Driveway spacing should allow reasonable deceleration of vehicles approaching on the street and acceleration by vehicles entering the street. Median breaks for driveways should not be contemplated unless sufficient length is available to accommodate deceleration tapers and storage lengths. Table 1-4 reflects median and median break criteria. This criteria is based on the National Cooperative Highway Research Program (NCHRP) Report No. 93.

Full-function median openings (Figures 1-19, 1-20 and 1-21 in Appendix B of this manual) on major arterials should be allowed only where the minimum spacings for signalized intersections are practicable. At intermediate locations along major arterials, limited-function openings may be provided at the spacings listed in Table 1-4.

High volume driveways on major arterials should only be located opposite streets or other driveways when the minimum spacing requirements for signalized locations are met. Otherwise,

T-intersection configurations should be designed. When driveways are located opposite street intersections the two (2) should have compatible design elements.

On streets other than major arterials, full-function median openings are acceptable at the spacings listed in Table 1-4. On both major and minor arterials, access to public streets will have priority over access to private property.

G. Turn Lanes and Channelization.

The following design criteria was adapted from the ITE Report, Guidelines for Urban Major Street Design, 1983, Sections 9.3 and 9.4. and from the AASHTO manual, A Policy on Geometric Design of Highways and Streets, 1984 and from Research Report 258-1, Project 3-18-80-258 , Center for Transportation Research, Bureau of Engineering Research, The University of Texas at Austin, January, 1984.

1. Turn Lanes.

The primary purpose of left-turn lanes at intersections is to provide storage space. A secondary purpose of turn lanes is to provide a location for deceleration removed from the through traffic lanes, thereby maintaining the capacity of the through roadway. Studies have demonstrated that accident experience is significantly reduced when left-turn lanes are provided at intersections of two (2) major streets, i.e., collectors and arterials.

TABLE 1-4 MEDIAN OPENING CRITERIA

Design Speed (mph)	Minimum Spacing* Distance "C" from Figure 2-19		Minimum Spacing Distance B+C from Figure 1-19 in Appendix B			
			100' Min. Storage Requirement**		150' Min. Storage Requirement***	
	Absolute (ft)	Desirable (ft)	Absolute (ft)	Desirable (ft)	Absolute (ft)	Desirable (ft)
30	200	350	300	450	350	500
35	250	425	350	525	400	575
40	300	500	400	600	450	650
45	350	600	450	700	500	750
50	450	750	550	850	600	900

* Plus storage lengths based on peak hour volumes (see Table 1-5)

** Minimum storage when turning into a local street

*** Minimum storage when turning into a collector or an arterial street

Source: Based on NCHRP Report No. 93, 1970

At a minimum, storage lengths should be 150 feet when turning into a collector or an arterial and 100 feet when turning into a local street. At any unsignalized intersections, the storage length, exclusive of taper may be based on the number of turning vehicles likely to arrive in an average two (2) minute period within the peak hour with each vehicle accounting for approximately 20 feet of storage. At signalized intersections, the storage length depends on the signal cycle length, the signal phasing arrangement and the rate of arrivals and departures of left-turning vehicles (see Table 1-5).

TABLE 1-5 STORAGE LENGTH OF LEFT TURN BAY (FOR ARTERIAL)**		
Lmax(av)	**City of Bee Cave Standard**	**City of Bee Cave Dual Left Standard**
0	0	-
6	150	-
8	200	-
10	250	-
12	300	200
14	340	200
16	370	200
17	400	300
18	425	300
20	450	300
21	475	300
22	500	300
23	525	300
24	550	300
25	575	350
* Storage lengths exceeding 400 feet should be discouraged. All proposals for turn bays exceeding 400 feet will require the approval of the City Engineer.		
** Similar applications could be used for other street classifications.		

Lmax (av) = 5.5 (Lavg $^{0.58}$) (based on average condition)
Source: Based on Research Report 258-1, University of Texas Center for Transportation Research, 1984

Dual left-turn and right-turn lanes are successful where traffic volumes exceed the capacity of a single lane and the cross-street is of sufficient width to receive two (2) vehicles turning abreast. For dual right-turn lanes and dual left-turn lanes from one (1) way streets, the inside lane must be a mandatory turn.

2. Channelization.

Channelization of intersections is the separation or regulation of conflicting traffic movement into definite paths of travel by the use of pavement markings, raised islands or other suitable means to facilitate the safe and orderly movements of both vehicles and pedestrians. The main objectives of intersection channelization are to assure orderly traffic movement, increase capacity, improve safety and provide maximum convenience. To carry out these objectives, channelization is employed for one (1) or more of the following purposes:

• Separation of conflicts.

• Control of angle of conflict.

• Reduction of excessive pavement areas.

• Regulation of traffic and indication of proper use of the intersection.

• Arrangements to favor predominant turning movements.

• Protection of pedestrians.

• Protection and storage of turning and crossing vehicles.

• Location of traffic control devices.

• Prohibition of specific movements.

Small, isolated channelization islands should be avoided. Islands should be readily visible and designs with numerous small islands should be discarded in favor of those with a few large ones. Long narrow islands may be undesirable adjacent to turn lanes. Islands with at least 100 square feet are desirable but, under very restricted conditions, 75 square feet may be used. Islands used for pedestrian refuge desirably should be six (6) feet wide, with a minimum of four (4) feet. If wheelchair access is to be considered, the minimum width of a curb ramp shall be 36 inches, exclusive of flared sides.

The following principles should be considered and addressed in meeting conditions at particular intersections. However, if they are disregarded, the objectives of channelization will not be achieved and the resulting design may be hazardous and inefficient.

• Reduce the area of conflict; large paved intersectional areas invite hazardous vehicle and pedestrian movements.

• When traffic streams cross without merging and weaving, make the crossing at or near right angles. If traffic signal control is planned, the crossing angle may be less than right angle with suitable signal design and visual clues.

• Merge traffic streams at small angles.

• The speed of a traffic stream entering an intersection may be controlled by funneling.

• Provide refuge (shadowing) for turning and crossing vehicles where possible and necessary with channelization.

• Use channelization to separate conflict points within an intersection.

• Block prohibited turns with well-delineated channelization.

• Channelization may provide locations for the installation of essential traffic control devices to enhance their visibility.

H. Environmental Considerations.

Application of the street design criteria contained in this document to new subdivisions and site developments must take into consideration all applicable environmental standards, including restrictions on cut and fill and development setbacks from waterways and critical environmental features. Requirements of the street design criteria shall not be considered as sole justification for variances from NPS and/or subdivision chapters. Conversely, requirements of these chapters shall not be considered as sole justification for variances from street design criteria. It is advisable to delineate all required setbacks and other applicable environmental protection measures prior to designing streets.

Minor deviations from the street design criteria may be applied for, on a case-by-case basis, in order to protect specific environmental features on severely constrained tracts provided that proposed deviations meet minimum safety standards and are approved by City Engineer and the Director of Planning and Development. General deviations may be pursued as stated in the Preface of this Manual.

In the event that differences occur, the resolution procedure provided for in the City of Bee Cave Code of ordinances applies.

1.2.2 CLASSIFICATION DESIGN CRITERIA

The following includes specific design criteria for each street classification noted in Section 1.2.2 as required to attain adequate levels of service and safety. Table 1-7 summarizes the general design criteria for each of the street classification noted in Section 1.2.2.

Above-minimum design values should be used whenever feasible, to assure maximum safety and operational characteristics of a transportation system. Minimum values should be recognized and used when constraints encountered are present in such quantities to justify use of minimum values.

ADTs indicated in this document reflect typical ranges pertaining to the street classification. These ranges are not intended to be used as a sole basis for determining the street classifications. Rather, streets should be classified in regard to their functional characteristics.

Various roadway cross-sections may be used to meet specific needs or goals; cross sections shall not be the sole basis for determining street classifications.

Minimum centerline radii shown in the tables are based on a normal crown section.

Design speed is an important function of roadway design. The proper design speed selection is influenced by the character of terrain, the density and type of adjacent land use, the classification and function of the roadway, the traffic volumes expected to use the roadway and by economic and environmental considerations. For example, the

design of a roadway in level terrain is often based on a higher design speed than one in mountainous terrain; for one in a rural area, a higher design speed than one in an urban area; and for a high-volume highway, a higher design speed than one carrying low traffic volumes. It is important to recognize and treat individual roadways based on their specific characteristics. The design speed should be determined based on the design engineer's judgments on what design criteria are the most feasible for that particular roadway within the ranges provided in this document.

A. Alley

Unless explicitly required, alleys are optional improvements and may be constructed at the discretion of the Subdivider. If alleys are constructed, they must meet the regulations of **Section 2.5.9G** of the City of Bee Cave UDC and be in a separate lot(s) dedicated to and maintained by a Property Owners Association.

B. Local Streets

Local streets are intended primarily to serve traffic within a neighborhood or within a limited district. Local streets are not continuous through several districts. A design speed of less than 30 mph may be allowed for local streets if supported by an engineering study satisfactory to the entity that will adopt speed limits for the road.

1. Local Residential. In a residential neighborhood, a local street typically serves less than 50 single family R-1 through R-4 residential zoned dwelling units in number. Local streets should be designed to minimize through traffic movement; on-street parking is usually permitted (see Figure 1-22 contained in Appendix B of this manual for design criteria).
2. Rural Residential. This street classification, which comprises of a 24’ pavement and roadside swales, is generally reserved for R-1 – Residential Estate zoning district.

C. Collector Street.

These streets collect traffic from other streets, serving as the most direct route to an arterial or other collector street. The four (4) types of collector streets are residential, neighborhood, primary (undivided), and primary (divided).

1. Collector, Residential.

   A residential collector street generally serves to collect traffic from local streets within a residential district and is not intended to continue through several districts. Residential collector streets provide access to abutting property with residential zoning districts and generally provide on-street parking. Such streets typically exist within a subdivision adjacent to single family and to multifamily developments (see Figure 1-25 in Appendix B of this manual for design criteria). Direct driveway access to residential units is discouraged.

2. Collector, Neighborhood.

   A neighborhood collector street is characterized by serving several districts or subdivisions. Neighborhood collector streets provide limited access to abutting property and may provide dedicated on-street parallel parking. Typically multifamily developments, schools, local retail developments and public facilities are located adjacent to neighborhood collectors. Direct driveway access for detached houses is prohibited (see Figure 1-28 in Appendix B of this manual for design criteria).

3. Collector, Primary (undivided).

A primary undivided collector street serves several subdivisions providing access from local or residential/neighborhood collectors to arterials. Primary collector streets may also be utilized to serve high traffic generating developments as determined essential through the development review process, i.e., T.I.A. Access to abutting properties should be very limited (see Figures 1-31 through 1-34 in Appendix B of this manual for primary collector street design criteria). Optional "with parking" road cross section available.

4. Collector, Primary (divided).

   Same as primary undivided collector street with the exception of on-street parking is not allowed, generally reserved for higher Average Daily Trips and as City approved.

D. Arterial Street.

1. General.

   Arterial streets represent the primary network of streets for the through movement of traffic in an urbanized area. Arterial streets generally move high volumes of traffic (ADTs ranging from 5,000 to 45,000 vehicles) for great distances and at relatively high speeds. The Bee Cave Thoroughfare Plan identifies the streets that compose the arterial street network. Access to abutting property should therefore be limited or restricted, with on-street parking strictly prohibited and cross access between adjacent properties encouraged. Single-family residential development should not front on arterial streets. In all instances, the minimum travel lane shall be 14 feet as a large variety of vehicles can be expected to utilize the system. The design criteria for the various arterial streets are provided in Figures 1-35 through 1-39 contained in Appendix B of this manual.

   (i) As a means of assuring proper placement of utilities, the City may require easement dedications from the applicant.

E. Cul-de-sac.

Cul-de-sac streets are open at one (1) end, the closed end constructed so as to facilitate traffic circulation in the reverse direction. Cul-de-sacs may be permissible so long as the development meets connectivity standards established in Article 2, Section 2.5.9 of the UDC. Single outlet streets serve a network of streets with one (1) point of access (see Figure 1-58 in Appendix B of this manual). Note that the distance from the System Origination Point (SOP) to the System Termination Point (STP) should be less than 700 feet. Greater lengths, up to 3,000 feet, may be considered if there are severe environmental constraints and a second outlet is not available. Lengths exceeding 2,000 feet, however, will require approval by the Planning & Zoning Commission, as well as City Council (see Table 1-11 for Single Outlet Street Criteria).

The use of islands with cul-de-sac bubbles is allowed provided that the bubble has a radius of 60 feet to FOC and the island is designed with a 30-foot radius measured to FOC. When islands are proposed, a maintenance agreement may be required to be established between the applicant and the City.

1. Cul-de-sac, Local.

Local cul-de-sacs are intended to serve residential dwelling units. Throat width and curb basis shall meet the same design criteria as required for a general local street (see Figure 1-40 in Appendix B of this manual for design criteria).

F. Single Outlet Streets.

Traffic issues pertaining to single outlet streets are partially mitigated by: (1) providing mid-block turnarounds (or cross-streets/loop streets), (2) increased pavement widths and (3) utilization of divided roadways, as noted in Table 1-6.

The criteria pertaining to single outlet streets are applicable to new developments whether the single outlet is temporary or permanent. When future extensions to the street system are anticipated, which will provide additional outlets, a temporary restriction may be placed on the amount of development allowed, until an additional outlet becomes available.

TABLE 1-6
SINGLE OUTLET STREETS**

ADT	Street Width (FOC - FOC)
Less than 300	30’
300 - 1000	36’
1000 - 2500	40’ or 44’
2500 - 4000	2 @ 24” w/16’ min. median width
Greater than 4000	Not permitted

** If the distance from the SOP to the STP exceeds 2000’, then the single outlet street must be designed with 2 @ 24 w/16’ minimum median width.

Source: City of Austin

Table 1-7 Geometric Design Criteria Summary Table										
Functional Classification	TCM Figure	ROW	Paving Width BOC-BOC	Median Width FOC-FOC	Curb Basis	Design Speed (mph)	Typ Length of Street	Typ Spacing of Cross Street	Min Centerline Radius	Side walk
Local										
Local Residential	1-23	50	31	-	10	25, 30	<1500	300	180,300	5
Rural Residential	1-24	70	24	-	10	25, 30	<1500	300	180,300	N/A
Collectors										
Residential (w/ parking)	1-25	60	48	-	10	30, 35	<1 mi	300	300,470	6
Residential (w/o parking)	1-25	60	41	-	10	30, 35	<1 mi	300	300,470	5
Neighborhood (w/ parking)	1-26	68	52	-	10	35	1-2 mi	500	470	8
Neighborhood (w/o parking)	1-26	68	45	-	10	35	1-2 mi	500	470	8
Primary - Undivided (w/ parking)	1-27	74	58	-	11	35	<2 mi	500	470	8
Primary – Undivided (w/o parking)	1-27	70	49	-	11	35	<2 mi	500	470	8
Primary - Divided	1-28	94	25 per travelway	17	11	35	> 1mi	1000	470	8
Arterials****										
Minor Arterial w/ Cont. Left Turn Lane	1-29	98	64	-	13.5	45	>1 mi	1000	1000	10
Minor Arterial (4 Lane Divided)	1-30	98	28 per travelway	16	12.5	45	>1 mi	1000	1000	10
Major Arterial (4 Lane	1-31	118	31 per travelway	20	12.5	45	>1 mi	1000	1000	10

Divided)										

Functional Classification	Min Tang Length sep. curves	Max Sust'nd Grade (%)	Max Grade <500' (%)	Min Horiz Tang Length Approaching			Min Spacing between Median Opening	Des Min Landing w/Grade <2% Approaching			Min Driveway Spacing*, ***			
				Loc	Col	Art		Loc	Col	Art	T1	T2		
												O	U	D
Local														
Local Residential	50	15	15	50	50	50	-	50	50	50	**	50	50	-
Rural Residential	50	15	15	50	50	50	-	50	50	50	10	50	50	-
Collectors														
Residential (w/ parking)	100	10	12	50	50	50	-	80	80	100	25	50	50	75
Residential (w/o parking)	100	10	12	50	50	50	-	80	80	100	25	50	50	75
Neighborhood (w/ parking)	100	10	11	50	50	50	-	80	80	125	25	50	50	75
Neighborhood (w/o parking)	100	10	11	50	50	50	-	80	80	125	25	50	50	75
Primary - Undivided (w/ parking)	100	10	11	50	75	75	-	80	80	125	-	50	75	75
Primary – Undivided (w/o parking)	100	8	8	50	75	75	-	80	80	125	-	50	75	75
Primary - Divided	100	9	11	50	75	75	var	80	100	125	-	50	100	100
Arterials****														
Minor Arterial w/ Cont. Left Turn Lane	150	7	7	-	75	75	-	-	125	125	-	75	150	-
Minor Arterial (4 Lane	150	7	7	-	75	75	450-750	-	125	125	-	75	-	200

Divided)														
Major Arterial (4 Lane Divided)	200	7	7	-	75	100	450-750	-	125	125	-	75	-	200
**** T1 = Type 1, T2 = Type 2; O = One Way, U = Undivided, D = Divided														

1.2.3 ADDITIONAL STANDARDS

A. Private Streets.

A private street is a vehicular roadway under private ownership and maintenance and may have its access controlled or restricted. Private streets normally serve residential properties on individual lots but may be used in commercial subdivisions as approved by the City Engineer.

Private streets are subject to city regulations for public streets in order to ensure:

• Safe movement of all vehicles from a private street to the public street system.

• Adequate vehicular access to all buildings and lots by emergency and service vehicles.

• Adequate construction standards in the event that such roads later become public streets.

• Adequate drainage and utilities.

Right-of-way for a private street is not dedicated to the public; however, it must be designated as a "private street, drainage, and public utility easement" and placed within its own platted lot exclusive for those purposes. The right-of-way required for private streets shall be based upon the same criteria as for public streets in similar developments.

In order to discourage through traffic, private streets should not form a direct link between two public streets that would normally become a thoroughfare for other traffic. Connection to two public streets to accommodate internal circulation is permitted.

Within City Limits and the ETJ driveway permits may be required for construction along and adjacent to private streets.

1. Creation of Private streets in New Subdivisions. New subdivisions within the City or ETJ which are proposed to be built with private streets may be denied by the Planning and Zoning Commission at Final Plat. See Article 2, Section 2.4.9 related to private street conditions. When an exception to permit lots to front on private streets instead of public streets is requested the following conditions must be met, in addition to the requirements for an exception request outlined in the Subdivision Chapter:

(i) A homeowners association must be created to assume responsibility for the maintenance and taxation provisions regarding the proposed private streets. Draft copies of the following documents are required to be submitted for review and approval during the preliminary plat review process, and approved copies must be recorded with final plat:

(1) Covenants, Conditions and Restrictions (outlines ownership, maintenance, fee assessment, association dues, and any other requested restrictions).

(2) Association Bylaws (outlines membership, voting rights and other items similar in nature).

In conjunction with the draft documents a note is required to be placed on the preliminary plan stating: "All private streets shown hereon over List street names] and any security gates or devices controlling access to such streets will be owned and maintained by the established homeowners association of this subdivision."

(ii) The following verbiage is required to be placed in the owner's dedication statement on the final plat:

… do hereby subdivide _____ acres of land out of said _____ acre tract in accordance with the plat shown hereon, to be known as "[subdivision's title']" subdivision, subject to the covenants and restrictions shown hereon, and we do hereby dedicate to the public the use of all easements shown hereon, subject to any easements and/or restrictions heretofore granted and not released. Further that the responsibility for maintenance and taxation of [private street name], a private street, shall be vested in the home owners association of [name of this final plate], as recorded in Document Number _____of the Travis County deed of records, and an express easement is, hereby granted across said private streets and any common areas for the use of the surface for all governmental functions, vehicular and non-vehicular, including fire and police protection, solid and other waste material pick up and any other purpose any governmental authority deems necessary, and we do further agree that all governmental entitles, their agents or employees, shall not be responsible or liable for any damage occurring to the surface of the said private street and any common area as a result of governmental vehicles traversing over same.

(iii) The private street must be constructed to City of Bee Cave standards (or County standards as may be applicable in the ETJ). The appropriate standards will be determined by the functional classification of the street. Applicable standards include geometric design criteria, pavement design, sidewalks, and clear zones.

(iv) The private street must not be needed to provide access to an adjacent property; or, if the street is needed for access to the adjacent property, a joint access agreement must have been executed with the adjacent property owner for use of the private street, and the private street must be stubbed out to the property line with an open-ended cul-de-sac for future extension.

(v) The private street must be identified on the plat as a separate lot, and any easements needed must be dedicated with the final plat.

(vi) The private street must have a direct connection to a dedicated public street or another approved private street. A private street will not be permitted as the only connection between two public streets.

(vii) If security gates are proposed, their location must be shown on the construction plans; a minimum storage space of 40 feet must be provided between the gates and the nearest intersecting street right-of-way; and the design of the gates must be approved by the City, County, and emergency service provider.

(viii) If the subdivision is located in the ETJ, Travis County must concur with the creation of the private street.

(ix) Standard street name signs must be installed at all intersections. An additional "Private Street" sign must be posted at the entrance and exit locations of all private streets which intersect public rights-of-way. Private street signs shall be of a different color than public street signs as approved by the City Engineer.

2. Conversion of Existing Private Streets to Public Streets. In certain cases, the City may allow existing private streets to be converted to public streets. In order to be accepted by the City as public streets, the following conditions must be met unless a waiver is approved City Council. The City, at its sole discretion, has the authority to waive one or more of the design requirements in order to accept the street as public.

   (i) The streets must conform to the design criteria in Table 1-7, as well as the pavement design standards in Section 3. The owners of the private street must provide documentation verifying the cross section construction of the private street.

   (ii) There must be no outstanding unpaid taxes owed on the streets.

   (iii) Existing building setbacks, lot widths, lot sizes, and yard sizes must conform to the requirements of the zoning district in which they are located, based upon the right-of-way lines established at an appropriate distance from the edge of the pavement.

   (iv) A street deed must be prepared and processed through normal procedures to dedicate the right-of-way to the public, with the concurrence of all abutting property owners. The owners of the private street are responsible for surveying and conveyance of the right-of-way to the City.

   (v) Any covenants or other legal documents which created the private streets must be amended or terminated.

   (vi) Any existing security gates, overhead rock entrance ways, speed bumps, special pavement treatments, and similar facilities which do not meet City design standards must be removed and the pavement repaired in an acceptable manner at the owner's expense, as determined by the City Engineer.

   (vii) Sidewalk construction must conform to Section 4, including approved curb ramps and curb ramp warnings.

   (viii) Private improvements left within the proposed right-of-way may require license agreements.

   (ix) Signals, and other street-related infrastructure must be acceptable to the responsible department.

   (x) The street must be inspected by the City Engineer or his/her designee. All needed repairs or maintenance strategies identified during the inspection must be made and paid for by the owners of the private street prior to acceptance by the City. Repairs of maintenance strategies must conform to the same requirements and specifications as required for public streets. The City will have no obligation to repair, maintain, or reconstruct newly accepted private streets for a period of two years, unless required by emergency or safety reasons.

   (xi) Designated off-street parking and garbage container areas will not become the responsibility of the City.

   (xii) The City shall reserve the right to deny acceptance of the private street if current City street maintenance budgets are 90% or less of the current maintenance needs.

1.2.4 HIGHWAYS

A. All highway designs must be approved by the applicable departments within the Texas Department of Transportation (TxDOT).

SECTION 2. TRAFFIC IMPACT ANALYSIS

2.1 GENERAL

Guidelines and requirements for a Traffic Impact Analysis (TIA) are provided in the Subdivision Design Standards as set forth in Article 2, Sections 2.5.11 and 2.5.12 of the City of Bee Cave Code of Ordinances.

SECTION 3. COMPUTERIZED PAVEMENT DESIGN

3.1 GENERAL

The computerized pavement design of transportation facilities and systems within the incorporated limits and the ETJ of the City shall comply with the City of Austin, Texas Transportation Criteria Manual – Computerized Pavement Design, latest edition.

The computerized pavement design will not be required unless specifically requested by the City Engineer. The SIM procedure shall be used for all street pavement design.

SECTION 4. SIDEWALKS AND CURB RAMPS

4.1 GENERAL

This section addresses pedestrian needs and identifies sidewalk and curb ramp requirements for the various street classifications.

4.2 SIDEWALK REQUIREMENTS

4.2.1 GENERAL REQUIREMENTS

Sidewalks must generally be constructed between the curb line and the property line. Sidewalks or portions of sidewalks and associated sidewalk furnishings constructed outside of the ROW, but provided in order to satisfy the requirement for a sidewalk must be accompanied by a public access easement.

Should the available right of way between the curb and adjacent property line be of insufficient size to accommodate the requirements of this section, alternative designs of the sidewalk may be constructed only with the approval of the City Engineer. Sidewalks or portions of sidewalks and associated sidewalk furnishings constructed outside of the ROW, but provided in order to satisfy the requirement for a sidewalk must be accompanied by a public access easement. The sidewalk shall be sloped ¼ inch in (1) one foot and the area between the sidewalk and the curb shall be sloped a minimum ¼ inch in one (1) foot above the curb and shall drain toward the roadway.

Sidewalks shall be constructed in accordance with the City of Bee Cave Standards and the City of Bee Cave Standard Specifications and in accordance with applicable provisions of the Americans With Disabilities Act. Sidewalks on cul-de-sacs shall be located on both sides of the throat and around the bubble. Table 1-7 indicates sidewalk requirements. Should topography or other site conditions result in an accessible route having less than 60 inches clearwidth, then passing spaces at least 60 inches by 60 inches shall be located at reasonable intervals not to exceed 200 lineal feet of distance. A T-shaped intersection of 2 sidewalks having a clear area of 60 inches square is an acceptable passing space.

4.2.2 LOCATION CRITERIA FOR STREETSCAPE FURNISHINGS

Streetscape furnishings are objects of the streetscape available for public use that are intended to enhance the pedestrian experience and support pedestrian activity as a transportation mode. Typically, streetscape furnishings are located in the at the back of the sidewalk but may also be located in the curbside zone in some instances if approved by the City Engineer. Regardless of their location, a 5' (1.5 m) clear zone shall be left for pedestrian travel, unimpeded by permanent or temporary objects. The dimensions of the curbside and clear zone will vary depending on street type and location within the city.

A. Bike Racks

Bike racks on sidewalks are intended to serve as decentralized parking where the bicycle is left for a short period of time. Racks should be located near places of major employment, recreational destinations and in pedestrian and retail districts. Racks should be visible from and convenient to building entrances, easily accessed from the street, protected from motor vehicles and visible to passersby to promote usage and enhance security. Where sidewalks have distinct use zones, the racks shall be located in the curbside zone.

Bike racks shall be located in the sidewalk and as follows:

- The clearance from the bike rack to any public or private utility appurtenance shall be a minimum of 36" (900 mm). Bike racks shall not be mounted on top of vaults or storm drain inlets.

B. Trash Receptacles

Trash receptacles and dog waste bins are located on sidewalks for the purpose of reducing litter on the street by providing a place for pedestrians to deposit small amounts of trash that they do not want to carry to their destinations. These receptacles shall be installed together as separate bins and should increase in number in high pedestrian use areas and near food service establishments. Receptacles shall be located no closer than 2' (600 mm) to benches or seating areas in order to minimize exposure of bench users to objectionable odors and insects. To enable users to find and use receptacles and facilitate servicing receptacles, they should be located in a consistent, predictable manner within street type.

C. Benches

Benches provide places for pedestrians to rest, wait for companions and gather together. Benches should be concentrated in areas of high pedestrian activity where there is lighting for secure night-time use. Benches are best located in shaded areas of the sidewalk for optimal year-round use. Place benches in groups facing each other to facilitate social interaction. Groups of benches shall include a space for wheelchair access to the seating group. All benches must be constructed with trash receptacles.

Benches shall be located in the sidewalk curbside zone and as follows:

- Benches may be located in planting zones when zones are six feet (6') or wider.
- The clearance from bench back to any vertical object or surface shall be 6" (150 mm).
- The clearance from the bench to any public or private utility appurtenance must be a minimum of 36" (900 mm). Benches shall not be mounted on top of vaults or storm drain inlets.

4.2.3 NONCONVENTIONAL SIDEWALKS

With the approval of the City Engineer and the Planning & Development Department, an alternative sidewalk design (such as a hike and bike trail) may be substituted for a conventional sidewalk, provided that maintenance

and public access agreements are provided and that they are accessible to persons with disabilities as defined and required in the Americans With Disabilities Act. Meandering sidewalks are encouraged in order to avoid trees or other natural features, provided that sufficient right-of-way is dedicated to accommodate them.

4.2.4 SIDEWALKS ON BRIDGES

Where sidewalks are required on bridges, they shall be a minimum of six (6) feet wide (clear of guardrail).

4.2.5 STATE FACILITIES

Pedestrian routes are required on or near to State-maintained highways except where prohibited by the Texas Department of Transportation. The preferred location is within the 75' buffer zone adjacent to the ROW in accordance with the City's Hike & Bike Connectivity Plan. Where this is not feasible, pedestrian routes on State-maintained highways must be located in accordance with the requirements of the Texas Department of Transportation and as required by the American With Disabilities Act, as far as practicable from the travel lanes.

4.3 CURB RAMPS

Sidewalks constructed to the requirements herein shall include a curb ramp wherever an accessible route crosses a curb. Curb ramps shall be designed and constructed in accordance with the City of Bee Cave Standard Details, the City of Bee Cave Standard Specifications and the requirements of the American With Disabilities Act (ADA), Appendix A to Part 36-Standards for Accessible Design, Section 4.7 Curb Ramps. Where these standards conflict, the stricter design criteria shall apply and take precedent.

Prior to subdivision acceptance by the City, all concrete and/or paver stone work within the right-of-way shall be constructed in accordance with the design details shown on the drawings. This includes Curb Ramps located at the radii PC and PT of the intersection, which shall be constructed in accordance with Standard Details 432S-5A and 432S-3. In locations where there are "Tee" type intersections, the cross of the Tee (opposite the intersection street) shall have a ramp constructed in line with the ramp across the street, unless approved by the City Engineer due to site constraints.

The preferred alignment for new curb ramp construction is perpendicular to the vehicular flow of traffic and perpendicular to the curb, as indicated by the Standard Details.

The following curb ramp guidelines have been adapted from the Standards and Specifications of Article 7, Article 601B, Vernon's Texas Civil Statutes, Elimination of Architectural Barriers available from the Texas Department of Licensing and Regulation and from the ADA Accessibility Guidelines For Buildings and Facilities.

A. Curb ramps shall be located so that they are not obstructed by parked vehicles and shall not intrude into vehicular traffic lanes.

B. The least possible slope shall be used for any curb ramp. Curb ramp slope shall not exceed a 1:12 vertical rise to horizontal run ratio. Curb ramp wings shall not exceed a 1:10 vertical rise to horizontal run ratio (See Figure 4-1 in Appendix B of this manual). Curb ramps to be constructed on existing sites or in existing buildings or facilities may have slopes and rises as allowed in Table 4-2 if space limitations prohibit the use of a 1:12 slope or less. A flat landing area with a minimum dimension of 48 inches (1.2 meters) deep and as wide as the ramp area must be located at the top of each curb ramp. In existing right-of-way or street locations where existing property lines do not allow for this 48 inch (1.2 meters) deep landing area, the wings or flared sides of the ramp must have a slope of 1:12 maximum. (See Figure 4-1 in Appendix B of this manual)

C. Sloped surfaces shall be stable, firm and slip-resistant. Ramp surface shall have a detectable warning surface system integral to the walking surface.

D. Detectable warning system shall consist of raised truncated domes with a diameter of nominal 0.9 in. (23mm), a height of nominal 0.2 in. (5mm) and a center-to-center spacing of nominal 2.35 in. (60mm) and shall contrast visually with adjoining surfaces, either light-on-dark, or dark-on-light. (See Figures 4-3 and 4-4 in Appendix B of this manual). The coloring agent used to provide contrast shall be an integral part of the walking surface.

E. The width of the curb ramp shall be a minimum dimension of 48 inches (1.2 meters) exclusive of flared sides or wings. On existing sidewalks only, where 48 inches (1.2 meters) is not feasible, a minimum width of 36 inches (0.9 meters), exclusive of flared sides or wings shall be allowed. If a curb ramp is located where pedestrians must walk across the ramp, or where it is not protected by handrails or guardrails, it shall have flared sides. Curb ramps with returned curbs may be used where pedestrians would not normally walk across the ramp. See Figure 4-5 in Appendix B of this manual.

F. Curb ramps shall be designed so that the "cradle" will allow wheelchair footrests to clear the adjoining surface during transition. The minimum angle from surface to surface shall be 170 degrees (see Figure 4-2 in Appendix B of this manual).

G. Curb ramps shall be located so as to provide a continuous accessible path of travel.

TABLE 4-1
SIDEWALK REQUIREMENTS+

Street Classification	Requirement	Minimum Width Feet (Meters)
Local	Both sides	5 (1.5)
Residential Collector	Both sides	6 (1.8)
Neighborhood Collector	Both sides	8 (1.8)
Primary Collector	Both sides	8 (1.8)
Arterials-Minor	Both sides	10 (3.0)
Arterials-Major	Both sides	10 (3.0)

Source: City of Bee Cave, Planning Department

TABLE 4-2
SLOPE AND RISE RATIOS FOR ALTERATIONS TO EXISTING CONDITIONS

Maximum Allowable Slope (%)	Maximum Rise	Maximum Horizontal Projection (RUN)
10.0% (1:10)	6 inches	60 inches
12.5% (1:8)	3 inches	24 inches

Source: Americans With Disabilities Act, Section 4.1.6(3)(a)

SECTION 5. DRIVEWAYS

5.1 GENERAL

This section provides minimum and desirable design criteria, provisions and requirements for safe and convenient access to abutting private property along streets and highways. The intent is to ensure that access is provided to abutting private property with a minimum of interference with the free and safe movement of vehicular and pedestrian traffic and to prevent traffic congestion arising from vehicular entry to or exit from abutting private property. The right of the public to free and unhampered passage of the public streets shall be held paramount to other interests. Regulated limitation of access is necessary on arterials to enhance their primary function of mobility. Conversely, the primary function of local streets is to provide access. Figure 1-2 in Appendix B

of this manual reflects the relationship of street classifications with access and mobility.

5.2 TYPES OF DRIVEWAYS

There are three (3) basic types of driveways.

5.2.1 TYPE I

A concrete driveway approach designed and intended to serve as access from a roadway to a lot or parcel of land which is a location for a one (1) or two (2) family residence.

5.2.2 TYPE II

A concrete driveway approach designed and intended to serve as access from a roadway to a lot or parcel of land used for any development or purpose other than one or two family residences.

5.2.3 TYPE III

A temporary asphalt driveway approach intended to provide vehicular access to a lot or parcel of land, such access being from a roadway not yet constructed to permanent lines and grades or a roadway not having curb and gutter. Driveways shall be reconstructed under Type I or Type II standards within 60 days after construction of the abutting street to permanent line and grade with concrete curb and gutter. See Figure 5-1 in Appendix B of this manual. Type III driveways serving one or two-family residences shall be designed in accordance with the criteria in Table 5-1. Type III driveways serving other land uses shall be designed in accordance with the criteria in Table 5-2.

Tables 5-1 and 5-2 specify design criteria for the various types of driveways.

5.3 DESIGN CRITERIA

5.3.1 GENERAL

A. If a curb inlet is present there shall be ten (10) feet between the inlet opening and the edge of a driveway curb return.

B. Access to alleys requires approval by the City Engineer and the Director of Planning and Development unless required by the Zoning District, in which case permission is automatically granted.

C. The angle of driveway approach shall be approximately 90 degrees for two (2) way driveways, 45-90 degrees for one (1) way driveways.

D. Unless approved by the City Engineer and the Director of Planning and Development, one-way driveways shall be prohibited on two-way undivided streets. In addition, one-way driveways are limited to

developments where two-way access is unfeasible because of special design considerations, such as severe site constraints, the need for circular drop-offs or other circumstances where one-way circulation may be preferred to two-way access. Examples of such developments include public and private schools, day care uses, car wash facilities and existing developments or small sites where two-way circulation is impractical (see Figure 9-9 in Appendix B of this manual for design criteria of semicircular drop-offs). Where one-way access is proposed, developments shall be designed to promote one-way, on-site circulation in support of the one-way drives. Circular drop-offs and one-way driveways shall be designed to prevent conflicts with traffic access, parking and on-site circulation. Priority, however, shall be directed towards reducing the number of driveway approaches along Principal Roadways and Arterial streets to limit conflict points and enhance traffic flows along such roadways. All one-way driveways separated by more than 15 feet (measured from edge to edge) must be signed for one-way operation.

E. Areas used for vehicle circulation, including but not limited to parking lots, shall have a six (6) inch raised curb along the entire right of way or any easement from which the use takes access except at the driveway approaches and access sidewalks.

F. Where Type I driveways are not appropriate, head-in, back-out parking is generally prohibited on all streets and alleys. Such a condition requires the approval of the City Engineer. Other alternatives, however, should be encouraged when possible.

G. All driveways must be constructed within the street frontage of the subject property, as determined by extending the side property lines to the curb line or in the case of shared driveways centered on shared property boundaries unless otherwise approved by the City Engineer. Neither the driveway nor the curb returns shall overlap adjacent property frontage without written approval from the adjacent property owner.

H. Common driveways may be approved provided that a permanent written access easement is obtained. The developer must include a plat note and provide dedication documents indicating that maintenance of the joint use driveway shall be the responsibility of the lot owners served by the joint use driveway. If more than three (3) residences are to be served by a single joint use driveway, the following requirements apply:

1. The developer must post fiscal surety for the construction of the joint use driveway prior to plat approval and must construct the driveway during the construction of the streets within the same subdivision, or within the term of the fiscal instrument if no public or private streets are to be constructed within the subdivision. The driveway construction shall be subject to City inspection and obtain City approval before fiscal will be released.
2. The developer must construct a driveway, designed by a professional engineer, to have an all-weather surface and a pavement structure meeting public street standards. The driveway must be designed to have no more than 9 inches of water overtopping the driveway during the one-hundred year storm event.
3. The developer must demonstrate compliance with applicable fire access criteria
4. The developer must obtain a written signature from the area fire service providers acknowledging their approval of the proposed joint use driveway.
5. The joint use access easement will be required to be dedicated as a public utility easement and may be required to be dedicated as a drainage easement, unless otherwise approved by the Director. In those cases where the joint use access easement is to be combined as a public utility and drainage easement, the access agreement for the driveway must include a clause

indicating that the driveway may be used by public service personnel and equipment for servicing public utilities.

6. If the developer does not use a restrictive covenant to require homeowners to park all vehicles off the joint use driveway surface, then the joint use driveway surface must be at least 24 feet wide. Otherwise, the driveway surface may be no less than 20 feet wide.

7. The developer must erect signs indicating "private driveway" at the driveway entrance and include a plat note indicating that maintenance of the driveway will not be the responsibility of the City.

I. Driveways may not exceed 70 percent of roadway frontage.

J. Type I driveways are to be located no closer to the corner of intersecting rights of way than 60 percent of parcel frontage or 50 feet, whichever is less. All other driveways are to be located no closer to the corner of intersecting rights of way than 60 percent of parcel frontage or 100 feet; whichever is less. Also, driveways shall not be constructed within the curb return of a street intersection.

K. All Type II and III driveways on undivided arterial streets shall be designed to align with opposing streets or driveways or be offset by a minimum of 120 feet (measured from edge to edge). All Type II and III driveways on undivided collector streets shall be designed to align with opposing streets or driveways or be offset by a minimum of 80 feet (measured from edge to edge). All Type II and III driveways on divided streets shall be designed to align with median breaks or be offset by a minimum of 100 feet (measured from the nose of the median to the nearest edge of the driveway). Alignment of driveways with opposing streets is discouraged for signalized intersections unless approved by City Engineer. When such a design is approved, the driveway approach may be constructed without an apron and the maximum driveway widths in Table 5-2 may be increased to match the cross-section of the opposing street.

L. Premises used as a motor or drive through bank or parking garage may have driveway approaches as approved by the City Engineer. Said approaches shall be utilized for drive-in facilities and shall not be utilized for angle or head-in parking.

M. It is desirable to minimize the number of driveways on an arterial street in order to reduce the number of conflict points and facilitate traffic flow. The dimension in Table 5-2 for spacing between driveways should be increased whenever possible so that the number of driveways can be reduced. It is recognized, however, that certain existing tracts may not be able to fully comply with these standards due to limited frontage or other constraints. When compliance with criteria stated in Table 5-2 is precluded due to the location of driveways on adjoining properties, attempts should be made to obtain alternative access where feasible, including joint access driveways, access easements to adjoining properties or access to intersecting streets.

N. The throat lengths in Table 5-2 may be reduced, if approved by the City Engineer, after considering the following factors:

1. Physical constraints on the site, such as existing structures;

2. The impact upon on-site circulation;

3. Shallow lot depths or unusual lot configurations;

4. Existing or potential traffic movements which are unsafe or which have an adverse effect on traffic operations;

5. Traffic volumes and classification on the driveway and the intersecting street;

6. Alternatives to the proposed design;

7. Other information presented by the applicant; and
8. For existing sites, the extent of redevelopment proposed.
9. Throat lengths in excess of those shown in Table 5-2 may be required by the City Engineer if justified by the findings of a traffic impact analysis or queuing study.

O. Right-turn deceleration lanes should be considered on approach to driveways when criteria indicated in Figure 5-3 in Appendix B of this manual is met.

P. Driveway Grade Breaks.

The following has been adapted from the ITE report, Guidelines for Driveway Designs and Locations. Figure 5-4 in Appendix B of this manual reflects acceptable driveway profile intended to limit abrupt changes in grades. These standards should eliminate the need for extremely low speeds and provide adequate vehicle clearance. The value of G1 is limited by shoulder slope or by the presence of a sidewalk within the right of way, but should not exceed ten (10) percent. If this grade exceeds ten (10) percent, then the tangent length shall be a minimum of 50 feet. The value of G2 for commercial and industrial driveways should be limited to six (6) percent and limited to ten (10) percent for multi-family driveways.

Where a driveway crosses or adjoins a sidewalk, walkway, or an accessible path of travel (as defined by the Americans With Disabilities Act of 1990) the driveway grade shall be a maximum of two (2) percent, over a minimum throat length of three (3) feet contiguous with the sidewalk, thereby effectively matching the cross slope of the sidewalk or accessible path of travel across the full width of the driveway.

Q. Channelized islands for limited movement driveways conforming to Figure 5-6 in Appendix B of this manual may be utilized, provided that the applicant establishes a maintenance agreement with the City.

Where a sidewalk, walkway, or an accessible path of travel, (as defined by the Americans With Disabilities Act of 1990) crosses a limited movement driveway island, a minimum four (4) foot wide sidewalk, across the island to provide a continuous, uninterrupted detectable warnings at the boundaries between the sidewalks and the driveways. Comply with applicable requirements of the Sidewalks and Curb Ramps Section 4 of the City of Bee Cave Transportation Design Criteria Manual.

R. Existing driveways may be required to conform with the standards in this manual, including driveway closing, sidewalk and curb construction where appropriate, as a condition of the approval of any new application for zoning, rezoning, or site plan, approval. In implementing any change in existing driveways, the Director of Planning & Development shall consider the recommendation of the City Engineer.

S. Refer to Article 3, Section 3.4.11(F)(4) of the Bee Cave UDC for the application of driveway standards to developed properties and properties with an approved site plan which are subject to right-of-way condemnation.

T. Where divided driveways are proposed, on-site circulation must be designed to minimize driver confusion and reinforce the one-way traffic flow on either side of the driveway median.

5.3.2 CRITERIA FOR VARIOUS TYPES OF DRIVEWAY

Tables 5-1 through 5-4 represent criteria for the various driveway classes.

TABLE 5-1 TYPE I DRIVEWAY CRITERIA			
	Min.	**Desirable**	**Max.**
SINGLE FAMILY			
Width	12′	18′	25′
Curb Return Radius	5′	5′	10′
Throat Length [b]	(Extended to property R.O.W. line-minimum)		
Spacing Between Driveways [c]	(Limited to one driveway per property)		
DUPLEXES AND TOWNHOMES [d]			
Width	15′	18′	25′
Curb Return Radius	5′	8′	10′
Throat Length [b]	(Extended to property R.O.W. line-minimum)		
Spacing Between Driveways	10′	-	-
b Distance from street to first conflict point.			
c Semicircular driveways acceptable with minimum spacing between driveway entrance and exit of 35 feet. (measured from inside edge to inside edge of driveway approach at the property line).			
d When two (2) driveways are used (one (1) per unit/two (2) maximum), single family standards for width shall apply.			
Source: City of Bee Cave			

TABLE 5-2 TYPE II COMMERCIAL DRIVEWAY CRITERIA										
Driveway Type	Roadway Type									
	Local/Rural Residential and Residential Collector		Neighborhood Collector		Primary Collector		Minor Arterial		Major Arterial	
	Min.	Max.	Min.	Max.	Min.	Max.	Min.	Max.	Min.	Max.
ONE WAY										
Width	15 [a]	20	15 [a]	20	18 [a]	25	18 [a]	25 [b]	18 [a]	25 [b]
Curb Return Radius	10	25	15	25 [c]	15	30 [c]	20	30 [c]	20	30 [c]
Throat Length [d]	-	-	20	-	20	-	40	-	50	-
Distance Between Entry and Exit Drive	50	-	50	-	50	-	75	-	75	-
Driveway Spacing [e]	50	-	75	-	100	-	150	-	200	-
Driveway Spacing on Hill Country Roadway	-	-	-	-	-	—	-	-	300	-
TWO WAY UNDIVIDED										
Width	25	40	25	40	30	40	30	45	30	45
Curb Return Radius	10	25	15	25 [c]	15	30 [c]	20	30 [c]	20	30 [c]
Throat Length [d]	-	-	20	-	20	-	40	-	50	
Driveway Spacing [e]	50	-	75	-	100	-	150	-	200	-
Driveway Spacing on Hill Country Road	-	-	-	-	-	-	-	-	300	-
Width (each side of median) [f]	20	24 [g]	20	24 [g]	20	24 [g]	20	30 [g]	20	30 [g]
Curb Return Radius	15	25 [c]	15	25 [c]	15	25 [c]	20	30 [c]	20	30 [c]
Throat Length [d]	20	-	20	-	20	-	40	-	50	-
Median Width [f]	4	15	4	15	4	15	4	15	4	15

Median Length	10	-	10	-	10	-	20	-	20	-
Driveway Spacing [e]	50	-	75	-	100	-	150	-	200	-
Driveway Spacing on Hill Country Roadway	-	-	-	-	-	-	-	-	300	-

[a] Greater width may be required for fire department emergency access.

[b] 30-foot minimum width may be required on state highways.

[c] Radius may be increased to 40 feet at driveways serving large trucks.

[d] Distance from the edge of pavement to first conflict point.

[f] On state highways, state standards may vary from City standards.

[g] When a divided driveway is the fourth leg of an intersection, a 36-foot width may be permitted to match the opposing street configuration

SECTION 6. CLEAR ZONES AND GUARD FENCES

6.1 GENERAL

The purpose of this section is to provide design criteria for establishing a roadway clear zone and the selection and installation procedures for guard fences.

This section is applicable for projects or work involving either inch-pound or SI units. Within the text and accompanying tables, the inch-pound units are given preference followed by SI units shown within parentheses.

6.2 CLEAR ZONES

The term "clear zone" is used to describe the generally flat and unobstructed area that is provided beyond the travel lanes. The clear zone may include shoulders.

For urban streets, arterials, collectors and local streets, where curbs are used, available area for clear zones may be limited. A clear zone offset of 7 ft from the edge of the traveled way is desirable. This area should be clear of all unyielding objects such as trees, sign supports, utility poles, light poles, and any other fixed object that might increase the potential severity of a crash when a vehicle runs off the road. A minimum offset distance of 18 inches (450 mm) should be provided between the face of curb and obstructions such as utility poles, lighting poles and fire hydrants (Local Urban Streets, Horizontal Clearance to Obstructions, Chapter 5 of AASHTO's, "A Policy On Geometric Design of Highways and Streets, 2011"). Greater offsets should be provided when possible to permit curbside parking.

Because most curbs do not have a capability to redirect vehicles, the minimum clear zone distance should be increased as directed by the Engineer or designated representative commensurate with increases in traffic volumes and vehicle speeds.

6.2.1 TRANSPORTATION GUIDELINES FOR LANDSCAPING

A. Roadsides.

Safety shall be the foremost consideration in the placement and selection of plant material in the City's right-of-way. The main focus of these guidelines is the prevention of traffic hazards that can be created by the placement of landscaping which restricts the sight distance or creates roadside obstacles. The following addresses acceptable criteria for landscaping and planting on roadsides, within the median, and at intersections. All dimensions specified for trunk diameter and height will include plants at maturity unless it is stated otherwise on the Drawings.

1. Trees with = 6 Inches (150 mm) Mature Trunk Diameter. The following reflect minimum setback requirements for existing and newly planted trees.

50 MPH (80 KPH) or Greater Design Speed.

(i) Barrier curbs adjacent to travel lane.
Where there are barrier curbs adjacent to the travel lane, a minimum setback of two (2) feet (600 mm) for existing trees and four (4) feet (1.2 meters) for new trees behind the face of the curb shall be provided as shown in Table 6-1and illustrated in Figure 6-1in Appendix B of this manual.

(ii) Shoulder adjacent to travel lane.
Where there are shoulders adjacent to the travel lane, a minimum setback of ten (10) feet (3 meters) for existing trees and eighteen (18) feet (5.4 meters) for new trees from the edge of the

travel lane shall be provided as shown in Table 6-1and illustrated in Figure 6-2 in Appendix B of this manual.

TABLE 6-1 MINIMUM SETBACK REQUIREMENTS FOR EXISTING AND NEWLY PLANTED TREES					
Design Speed mph (KPH)	Tree Diameter At Maturity	Roadways with Barrier Curb		Roadways with Shoulders*	
		Existing (x)	New (y_t)	Existing (x_1)	Tree (y_1)
= 50 (80)	= 6" (150 mm)	2' (200 mm)	4' (1.20 m)	10' (3 m)	18' (5.4 m)
	>6" (150 mm)	6' (1.8 m)	6' (1.8 m) **	30' (9 m)	30' (9 m)
= 45 (72) or less	= 6" (150 mm)	1.5' (150 mm)	3' (900 mm)	8' (2.4 m)	10' (3 m)
	>6" (150 mm)	4' (1.2 m)	6' (1.8 m) **	18' (5.4 m)	25' (7.5 m)
* Includes roadways with side slope of 6:1 or flatter and average daily traffic volumes of over 6000 vehicles. The values may be adjusted for lower traffic volumes with guidelines presented in Source #2.					
** For sidewalks 12' (3.6 m) or greater in width the 6' (1.8 m) minimum setback distance may be reduced, when appropriate measures, that are approved by the Engineer or designated representative, are adopted to protect the subgrade and base layer supporting the curb and gutter from tree root growth and water/moisture intrusions.					
Sources:					
1) Based on AASHTO - Geometric Design of Highways and Streets, 1984					
2) Based on AASHTO - Guide for Selecting, Locating, and Designing Traffic Barriers, 1977					
3) City of Bee Cave, Planning and Development Department					

45 MPH (72 KPH) or Less Design Speed.

(iii) Barrier curbs adjacent to travel lane.
Where there are barrier curbs adjacent to the travel lane, a minimum setback of one and a half (1.5) feet (450 mm) for existing trees and three (3) feet (900 mm) for new trees behind the face of the curb shall be provided as shown in Table 6-1and illustrated in Figure 6-1in Appendix B of this manual.

(iv) Shoulders adjacent to travel lane.
Where there are shoulders adjacent to the travel lane, a minimum setback of eight (8) feet (2.4 meters) for existing trees and ten (10) feet (3 meters) for new trees from the edge of the travel lane shall be provided as shown in Table 6-1 and illustrated in Figure 6-2 in Appendix B of this manual.

(v) Adjacent to parking lane on local street.
A two (2) foot (600 mm) setback distance behind the face of the curb is required where parking is permitted adjacent to the curb on local streets.

(vi) Sidewalks adjacent to the curb.
Where there are sidewalks adjacent to the curb, no definite setback distance from the sidewalk is required. However, a two (2) foot (600 mm) setback distance is desirable. Trees shall not be allowed in sidewalks less than 12’ (3.6 m) in width. Whenever possible sidewalks should be routed around trees on public property or private sidewalk easements if provided.

2. Trees With > 6 Inches (600 mm) Mature Trunk Diameter. The following reflect minimum setback requirements for existing and newly planted trees.

50 MPH (80 KPH) or Greater Design Speed.

(i) Barrier curbs adjacent to travel lane.
Where there are barrier curbs adjacent to the travel lane, a minimum setback of six (6) feet (1.8 meters) behind the face of the curb shall be provided for both existing and newly planted trees as shown in Table 6-1and illustrated in Figure 6-1in Appendix B of this manual.

(ii) Shoulders adjacent to travel lane.
Where there are shoulders adjacent to the travel lane, a minimum setback of thirty (30) feet (9 meters) for both existing and newly planted trees from the edge of the travel lane shall be provided as shown in Table 6-1and illustrated in Figure 6-2 in Appendix B of this manual.

(iii) Sidewalks adjacent to the curb.
Where there are sidewalks adjacent to the curb, a minimum setback of six (6) feet (1.8 meters) behind the face of the curb shall be provided. All trees are required to be placed a minimum of 2 feet (600 mm) from the edge of sidewalk to the ultimate edge of the mature tree. Trees shall not be allowed in sidewalks less than 12 feet (3.6 m) in width. Whenever possible sidewalks should be routed around trees on public property or private sidewalk easements if provided.

When a tree is to be planted in a sidewalk that is 12' (3.6 m) or wider, the minimum setback distance may be reduced when appropriate measures, that are approved by the Engineer or designated representative, are adopted to protect the subgrade and base layer supporting the curb and gutter from tree root growth and water/moisture intrusion from the newly planted tree area. The approval for reduction in the setback distance by the Engineer or designated representative shall be in writing.

45 MPH (72 KPH) or Less Design Speed.

(iv) Barrier curbs adjacent to travel lane.
Where there are barrier curbs adjacent to the travel lane, a setback of four (4) feet (1.2 meters) for existing trees and six (6) feet (1.8 meters) for newly planted trees behind the face of the curb shall be provided as shown in Table 6-1 and illustrated in Figure 6-2 in Appendix B of this manual.

(v) Shoulders adjacent to travel lane.
Where there are shoulders adjacent to the travel lane, a minimum setback of eighteen (18) feet (5.4 meters) for existing trees and twenty-five (25) (7.5 meters) feet for newly planted trees from the edge of travel lane shall be provided as shown in Table 6-1and illustrated in Figure 6-2 in Appendix B of this manual.

(vi) Sidewalks adjacent to the curb.

Where there are sidewalks adjacent to the curb, a minimum setback of six (6) feet (1.8 meters) behind the face of the curb shall be provided. All trees are required to be placed a minimum of 2 feet (600 mm) from the edge of sidewalk to the ultimate edge of the mature tree. Trees shall not be allowed in sidewalks less than 12 feet (3.6 m) in width. Whenever possible sidewalks should be routed around trees on public property or private sidewalk easements if provided.

When a tree is to be planted in a sidewalk that is 12' (3.6 m) or wider, the minimum setback distance may be reduced when appropriate measures, that are approved by the Engineer or designated representative, are adopted to protect the subgrade and base layer supporting the curb and gutter from tree root growth and water/moisture intrusion from the newly planted tree area. The approval for reduction in the setback distance by the Engineer or designated representative shall be in writing.

B. Side Slopes.

On roadways with shoulders having side slopes of 5 to 1 or steeper, no tree shall be planted or allowed to remain within the recommended clear zone as shown in Table 6-2 and illustrated in Figure 6-3 in Appendix B of this manual. The recommended distances may be adjusted if the trees are located in the ditch or if the average daily traffic volume of the roadway is less than 6000. These adjustments shall be made using the guidelines presented in AASHTO, Guide for Selecting, Locating, and Designing Traffic Barriers, 1977.

C. Clearance Height.

A minimum clearance height of eight (8) feet (2.4 meters) above the street level must be provided and maintained for all existing and newly planted trees if adjacent to a sidewalk. However, if the limbs of trees overhang the curb line or edge of travel lane of any street, a minimum clearance height of fourteen (14) feet (4.2 meters) is required.

TABLE 6-2 RECOMMENDED LATERAL CLEARANCE ON CUT AND FILL SECTIONS *

Design Speed Mph (KPH)	Fill Section Side Slope (b/a)			Cut Section Side Slope (b/a)		
	5:1	4:1	3:1 & Steeper	5:1	4:1	3:1 & Steeper
≤45 (80)	18′ (5.4 m)	19′ (5.7 m)	20′ (3 m)	16′ (4.8 m)	16′ (4.8 m)	16′ (4.8 m)
55 (88.5)	24′ (7.2 m)	30′ (9 m)	56′ (16.8 m)	19′ (5.7 m)	18′ (5.4 m)	17′ (5.1m)
≥65 (105)	37′ (11.1 m)	45′ (13.5 m)	100′ (30 m)	27′ (8.1 m)	22′ (6.6 m)	20′ (6m)

*These values may be adjusted for roadways with less then 6000 daily traffic volumes with guidelines presented in the Source below.

Source: Based on AASHTO - Guide for Selecting, Locating, and Designing Traffic Barriers, 1977.

D. Curve Section of Roadways with Shoulder.

The setback requirements for landscaping on roadways with shoulders should be increased on the outside of curves as shown in Figure 6-4 in Appendix B of this manual. The required setback varies with the design speed as presented in the AASHTO, Guide for Selecting, Locating, and Designing Traffic Barriers, 1977.

(i) 45 mph (72 KPH) or Less Design Speed.
Where the horizontal curve of the roadway through lanes is designed with a 45 mph (72 KPH) or less design speed, the setback distance should be increased from a point one hundred fifty (150) feet (45 meters) beyond the point of curvature (PC) to a point one hundred fifty (150) feet (45 meters) beyond the point of tangency (PT) using the formula shown in Figure 6-4 in Appendix B of this manual.

(ii) 50 mph (80 KPH) or Greater Design Speed.
Where the horizontal curve of the roadway through lanes is designed with a 50 mph (80 KPH) or greater design speed, the setback distance should be increased from a point two hundred eighty (280) feet (84 meters) beyond the point of curvature (PC) to a point two hundred eighty (280) feet (84 meters) beyond the point of tangency (PT) using the formula shown in Figure 6-4 in Appendix B of this manual.

(iii) On curves, the sight distance requirements presented in Section 1.3.1.C.6 of this manual must be maintained. Only low growing shrubs not greater than two (2) feet (600 mm) in height or small plants shall be considered in areas where horizontal sight distance is a factor.

E. Median.

1. Lateral Landscaping Placement Requirements.

   All planting (existing and new trees) in the median shall comply with the same lateral placement requirements as set forth in the Roadsides Section (6.2.3.A).

2. Longitudinal Landscaping Placement Requirements.

   (i) All plantings, except ground covers with no more than twelve (12) inches (300 mm) in height, shall be located greater than seventy-five (75) feet (22.5 meters) from the end of the median nose as shown in Figure 6-5 in Appendix B of this manual.

   (ii) Ground covers with no more than twelve (12) inches (300 mm) in height and trees with a mature trunk diameter of six (6) inches (150 mm) or less is recommended in the area from a point seventy-five (75) feet (22.5 meters) to one hundred fifty (150) feet (45 meters) from the nose of the median (see Figure 6-5 in Appendix B of this manual). All trees shall be maintained to provide an eight (8) foot (2.4 meters) minimum foliage clearance height. A minimum 15 feet (4.5 meters) spacing (center-to-center) shall be provided for all trees.

   (iii) In the area beyond 150 feet (45 meters) from the nose of the median, any planting shall be allowed as long as the minimum sight distance requirements are provided. Although not required, maintaining an eight (8) foot (2.4 meters) or greater clearance height is desirable.

F. Intersection.

No landscaping of any type shall obstruct vision within the sight triangle as defined by the shaded area in Figure 6-6 in Appendix B of this manual. The criteria for a sight triangle is presented in Section 1.3.1.C.6 of this manual. These requirements will apply to any material from a height of two (2) feet (600 mm) to a clearance height of eight (8) feet (2.4 meters) above the top of curb,

including, but not limited to full grown trees, full-grown shrubs, fences, structures, any signs except traffic control signs, etc.

G. General Requirements.

The following requirements will apply to all landscaping within the right-of-way along roadsides, median and intersection.

1. Railroad Crossing.

   Only low growing shrubs no greater than a height of two (2) feet (600 mm) and small trees are recommended within two hundred fifty (250) feet (75 meters) of a railroad crossing to assure adequate sight visibility.

2. School Crossing.

   Only small trees and low growing shrubs no greater than two (2) feet (600 mm) in height are recommended within one hundred fifty (150) feet (45 meters) of a school crossing to assure pedestrian safety by not restricting the sight visibility of motorists.

3. Traffic Control Devices.

   No vegetation from a height of seven (7) feet (2.1 meters) to a height of fourteen (14) feet (4.2 meters) is recommended within twenty-five (25) feet (7.5 meters) of any existing or proposed traffic signal, regulatory or warning signs, or other traffic control devices.

4. Right-of-Way.

   Where limited right-of-way or the necessity for planting would result in less clearance, all factors in a specific area should be weighed to decide if a special exception is justified. Such an exception must be approved by the Director of the Public Works Department or the Director's designee.

H. General Note.

Any landscaping that is not in compliance with the requirements stated in this criteria or has been planted without an approved License Agreement from the City shall be removed by the sponsoring organization or individual at their cost. The required License Agreement may be obtained from the City of Bee Cave Planning and Development Department.

I. Maintenance Requirements.

1. The adjacent property owner(s) or civic organization will be expected to maintain the landscaping located between curb or edge of pavement and the property line. The adjacent property owner or civic organization shall also be responsible for trimming tree limbs from trees located on private property, which cause an obstruction of the right-of-way.

2. The City reserves the right to prune or remove any vegetation, at the cost of the sponsoring organization or individual, as determined necessary for visibility and ease of maintenance.

6.3 GUARD FENCES AND RAILING

6.3.1 PEDESTRIAN AND SEPARATOR RAILING

A. This section of the Transportation Criteria Manual (TCM) describes the requirements of the City of Bee Cave relative to pedestrian and separator railing. In order to maintain consistency and safety to the general public, the TxDOT "Bridge Railing Manual" (BRM, see http://manuals.dot.state.tx.us/dynaweb/colbridg/rlg) is hereby included by reference as a requirement

within the jurisdiction of the City of Bee Cave. The City of Bee Cave's TCM will provide supplementary and complementary information and requirements to the TxDOT document. When there are differences between BRM and TCM, the more restrictive or conservative of the two shall be required.

B. The "AREA OF INFLUENCE" for pedestrian railing purposes shall be defined as the five-foot (5') strip of area parallel and adjacent to sidewalks, on either or both sides, if applicable.

C. On roadway or bridge sections, if any portion of the area of influence will include side slopes (interim or final) steeper than three (3) horizontal to one (1) vertical, then a pedestrian railing shall be required.

D. On roadway or bridge sections, if there is or will be a vertical drop-off of more than two (2) inches anywhere in the area of influence (exclusive of curb and gutter), then a pedestrian railing shall be required.

E. For projects proposing the installation of publicly maintained improvements in the right-of-way or easements, pedestrian railing shall be one of the following Texas Department of Transportation (TxDOT) standard drawings: "Pedestrian Rail, Type PR1"; "Pedestrian Rail, Type PR2" or a railing approved by the Engineer or designated representative. Responsibility for the appropriate selection and application of these standard railings remains with the licensed professional engineer who specifies them.

F. For bridges with a design or operating speed above forty-five (45) mph, a separator railing is required to shield pedestrians from vehicles. In order to maintain consistency and safety to the general public, refer to the TxDOT "Bridge Railing Manual" Chapter 5, Section 2, "Bridge Railing for Pedestrians".

G. Any bridge with a design or operating speed of forty-five (45) mph or less shall be considered a "low speed" facility and shall generally not require a separator railing shielding pedestrians from vehicles.

6.3.2 BRIDGE RAILING

A. This section of the Transportation Criteria Manual (TCM) describes the requirements of the City of Bee Cave. In order to maintain consistency and safety to the general public, the TxDOT "Bridge Railing Manual" is hereby included by reference as a requirement within the jurisdiction of the City of Bee Cave. The City of Bee Cave's TCM will provide supplementary and complementary information and requirements to the TxDOT document. When there are differences between BRM and TCM, the more restrictive or conservative of the two shall be required.

B. Bridge railing shall be as defined in the TxDOT BRM. For construction by site permit or for new subdivision construction, bridge railing shall be required at all bridges. For capital improvement projects on any roadways, bridge railing shall be required for all bridges. Responsibility for the appropriate use of TxDOT standard bridge railings remains with the licensed professional engineer who specifies them.

C. When a bridge railing is to be specified on a bridge with a pedestrian walkway and a combination railing is deemed inappropriate (e.g. design speed too high for combination railing), then the pedestrian railing shall be used in conjunction with a non-combination bridge railing.

D. When transitions from bridge railing on the bridge to traffic railing on the roadway cannot be accommodated with metal beam guard fence (e.g. driveways), then suitable end protection (energy absorbing devices) shall be specified for the exposed ends of the bridge railing.

SECTION 7. MULTI-USE PATHS

7.1 GENERAL

Multi-use paths identified in the City's Hike & Bike Connectivity Plan are to be designed to accommodate the necessary criteria as stated in this section.

7.2 FUNCTIONAL CHARACTERISTICS

7.2.1 PLACEMENT, COMPOSITION, & DESIGN CRITERIA

Multi-use trails identified in the City's Hike and Bike Connectivity Plan are to be designed to accommodate the necessary criteria as stated in this section The preferred width of a new multi-use trail is 10 feet, however, there may be areas in which the multi-use trail will need to be narrower to work with natural conditions, such as trees, utilities, fences, topographic changes, or other unforeseen issues located outside of the ROW. The multi-use trails are intended to be used primarily for recreational purposes and connectivity among and between residential and non-residential land uses. Depending on the area of the City in which a trail extension is proposed, trail segments may be located within a floodplain, within the right-of-way, or within a public access/trail easement across private property.

A. Material.

Generally, the multi-use trail material should be concrete, however alterative materials such as stabilized decomposed granite may be considered on a case-by-case basis. In the case of decomposed granite, the installation shall not be allowed on slopes in excess of 5% or adjacent to waterways. The minimum thickness for concrete trails is 4 inches (4”) and 6 inches (6)” for crushed granite.

The condition of the support system is critical for the performance of the concrete trail. At a minimum, the soil should be free of high organic content (topsoil), and the underlying subgrade should be scarified to a specified depth and recompacted with moisture and density control. Where poor soils are encountered, crushed rock can be mixed in during the scarification process to create a soil-aggregate subgrade. Table 7-1 lists recommended subgrade preparation based on the quality of the existing subgrade. Proof rolling is recommended to evaluate freshly compacted subgrade. It is conducted by driving a fully loaded, single-axle or tandem-axle dump truck over the subgrade and observing the deflection or rutting of the compacted surface. Poor subgrade can be improved by replacing the weak areas with geosynthetics (geogrids and geotextiles) and aggregate subbase. These improvements minimize the probability of localized shear failure, thus improving bearing capacity (Gross et al. 2014). Poor subgrade can also be improved by treating it with cement, fly ash, or lime.

TABLE 7-1: RECOMMENDED SUBGRADE PREPARATION FOR DIFFERENT QUALITIES OF SUBGRADE	
Existing Subgrade Quality	**Subgrade Preparation**
High (sand and gravel)	Strip topsoil, scarify to 6 in. depth, and recompact with moisture and density control
Good to fair (silt and non-expansive clay)	Strip topsoil, scarify to 12 in. depth, and recompact with moisture and density control
Poor (weak, expansive clay)	Strip topsoil, scarify to 12 in. depth, and recompact with moisture and density control. If further improvements are needed in isolated wet areas, options include a 6 in. soil-aggregate subbase along with geosynthetic or chemical treatment

B. Horizontal Geometry.

Where the proposed trail radius of curvature is less than 100 feet, it is advisable to widen the trail to increase the lateral space required by cyclists as they lean to the inside of a turn. Figure 7-5 in Appendix B of this manual shows the methodology used in determining the necessary widening to compensate for lean. The amount of widening should be limited to a maximum of four (4) feet.

C. Longitudinal Grade & Cross Slope.

Whether or not a multi-use trail is favorable to pedestrians is largely dependent upon the grade and alignment of the trail. The amount of energy a pedestrian expends will affect the usage of the trail. Therefore, the grades should be kept to a minimum. Trails with a longitudinal grade over 5% are undesirable due to the major speed changes associated with the steeper grades and the need for users to maintain control. Proper warning signs, wider trail sections, higher design speeds for curves, extended clearances, and other measures may be warranted if the longitudinal grades need to be more than 5%.

A minimum of 1% cross slope is recommended for drainage, as well as for accessibility. This also helps prevent standing water and slick patches during cold months. The Public Right-of-Way Accessibility Guidelines (USAB 2011) require the cross slope for a shared path to be 2% or less. To allow for construction tolerance, a 1.5% design cross slope is typical (below figure).

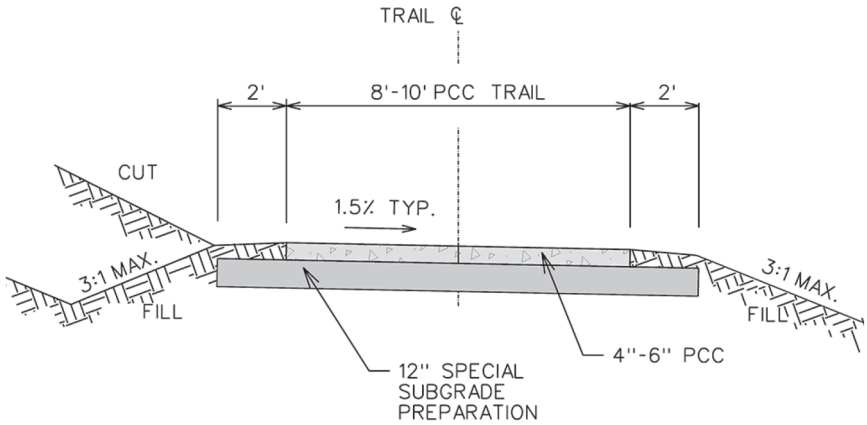

Figure 7-1: Typical Concrete Trail Detail

The cross slope is recommended to follow the same path as the existing terrain or be directed toward a drainageway or curb and gutter. Typically, it is recommended to avoid a crown so that surface runoff is maintained in one direction (AASHTO 2012). In situations where cross slope needs to transition to connect to a horizontal curve or an existing slope, a minimum transition length of 5 ft for each 1% cross slope change should be used (AASHTO 2012).

Stopping sight distance should also be considered when establishing a trails alignment and vertical geometry. Figure 7-7 in Appendix B of this manual gives the stopping sight distance for various speeds and related grades. The stopping sight distance for crest vertical curves can be determined from Figure 7-8 in Appendix B of this manual.

D. Clear Zone.

Separation of the trails from other natural and artificial structures should be provided for the safety and comfort of the users. To separate the trail from obstacles like trees, rocks, bridge piers, poles, and abutments, a minimum of 2 ft graded area with a maximum cross slope of 6:1 should be maintained on both sides of the trail. If a trail runs alongside a roadway and the offset from the curb edge is less than 5 ft, or the trail runs alongside a water body or downward slope of 3:1 or steeper and less than 5 ft of separation is present, then a safety barrier or railing is needed (Figure 7-2 below).

Figure 7-2: Barrier along the trail installed for safety

The railings should be at least 42 in. high. A minimum vertical clearance of 10 ft is typical for tunnels, under bridge crossings, as well as other overhead obstructions. Other objects placed outside the clear zone include signs and lighting. Signs should be installed according to the Texas Manual on Uniform Traffic Control Devices (TMUTCD).

E. Retaining Walls.

There are situations where a retaining wall is needed to accommodate trail construction in certain terrain. The trail and wall can be combined into a single system. The wall can be on either side (with approved safety railing) as best suits the design (Figure 7-3 below). The concrete mix design for a combined retaining wall and trail is typically a structural concrete mix.

Figure 7-3: Combined retaining wall and trail

SECTION 8. TRAFFIC CONTROL

8.1 GENERAL

Traffic control for transportation facilities and systems within the incorporated limits and the ETJ of the City shall comply with the City of Austin, Texas Transportation Criteria Manual – Traffic Control, latest edition.

SECTION 9. PARKING

9.1 GENERAL

The principal design objectives for any off-street parking facility are the provision of safe customer service and convenience coupled with minimal interference to street traffic flow. Specific ordinance requirements for parking facilities are provided in Article 3, Section 3.4.2 of the Bee Cave UDC.

The following supplemental guidelines have been developed as an aid in both designing parking facilities in conformance with accepted principles of traffic engineering and safety and in calculating parking requirements. These guidelines and principles will be routinely applied during the site plan review process. The Director of the Planning & Development Department may allow deviations from these standards if there is sufficient justification to use alternative designs. Such reasons will generally be limited to severe environmental or topographical constraints associated with a specific site or to questions of traffic safety unique to a specific site that are not adequately addressed by the guidelines.

The word Director as it applies to this section shall refer to the Director of the Planning and Development Department of the City of Bee Cave or his/her designee.

9.2 PARKING LOT DESIGN

All parking facilities shall be designed and constructed in accordance with the following criteria:

A. Parking lots and garages shall be constructed in accordance with the dimensions in Table 9-1 (together with Figure 9-1 in Appendix B of this manual). With the approval of the Director, parking lots and garages may be constructed in accordance with the alternative dimensions in Table 9-2 if the parking is restricted to low-turnover uses with repeat customers, such as office, multi-family, or condominium, and compact parking is limited to a maximum of 15% of the total parking provided.

B. For parking in a garage, columns may encroach into the head end of parking stalls, provided that the columns do not reduce the total (double-loaded) module width by more than 2 feet and the spaces do not encroach into more than 25 percent of the spaces. Columns may not encroach into the side of parking stalls; stall width must be measured from the face of the column.

C. Where angled parking is used, the angle and design of parking spaces and aisles shall be relatively consistent throughout a unified development. One-way angled parking aisles shall be designed to alternate the direction for adjacent aisles. Proper signs and markings shall be required to reinforce traffic circulation and flow.

D. Each parking space shall be independently accessible and shall have a vertical clearance as specified in the Building Code. Tandem parking spaces (one car behind another, so that one car must be moved before

the other can be accessed) are allowed for single family detached, duplex, townhome, and multi-family residential uses under the following conditions, which must be included as a note on the site plan:

1. The spaces must be reserved and assigned to dwelling units that are required to have more than one (1) parking space per unit.
2. At least one of the spaces must be located within an enclosed garage.
3. Both of the spaces must be standard size; no compact or handicapped accessible tandem spaces are permitted.
4. For townhome and multi-family residential, at least ten (10) percent of the total parking spaces on the site must be unassigned spaces which are available for the use of visitors.

E. Each parking and loading space shall have adequate drives, aisles and turning and maneuvering areas for access and usability.

F. Signs and curb markings may be required to indicate "No Parking — Fire Zone." Access aisles shall be designed with an appropriate 25 foot inside turning radius and a 50 foot outside turning radius at turns to accommodate operational fire department apparatus.

G. Parking and loading facilities accessed from a Type I, Type II, on Type III or driveway approach shall be surfaced and maintained with asphaltic concrete or other permanent hard surfacing material sufficient to prevent mud, dust, loose material and other nuisances. Materials may allow for infiltration of stormwater but must be included as impervious cover. For lots at least one acre in size, gravel surfacing is permitted for a single-family residence. With the approval of the Building Official, gravel surfacing may be permitted in other locations when deemed necessary to protect trees.

In such cases, the gravel surfacing must be limited to parking stall areas within the critical root zone of the trees and must be confined by curbing or other barriers to prevent it from being carried into public roadways and drainageways. Gravel surfacing will not be permitted on slopes greater than 5 percent, within handicapped parking spaces, or along accessible pathways between handicapped parking and the building entry. Gravel used for parking must be crushed, angular stone, with a minimum ¾" aggregate size, and must be included as impervious cover.

H. Safety barriers, fencing, wheel stops or curbing or other restrictive barriers and directional markers shall be provided to assure safety, efficient utilization, protection to landscaping and to prevent encroachment onto adjoining public or private property.

I. Visibility of and between pedestrians, bicyclists and motorists shall be assured when entering individual parking spaces, when circulating within a parking facility and when entering and exiting a parking facility.

J. Each parking space intended for use by the handicapped shall be designed in accordance with the standards of the State of Texas.

K. Bicycle spaces shall be racks or lockers anchored so that they cannot be easily removed. Each space allocated for this kind of parking shall be a minimum of two (2) feet wide and six (6) feet long. Bicycle parking facilities shall be certified by the Director of Planning & Development as either Class I, II or III, as follows:

(i) **Class I** - highest security - a completely enclosed parking space which protects the bicycle from inclement weather and designed so that an unauthorized person cannot remove a bicycle from it. Examples of Class I parking include bike lockers or locked storage rooms, bike check-in systems under control of an attendant, and bike storage facilities in a parking garage under constant personal or electronic surveillance.

(ii) **Class II** - medium security - a bike rack where both wheels and the frame can be secured with only a user-supplied lock without removing a wheel.

(iii) **Class III** - standard bike rack - a bike rack with the ability for the user to lock one (1) wheel and the frame, with the user providing the lock. Racks which secure only one wheel are not permitted.

A detail of the appropriate bike rack must be included on the site plan.

L. The applicant must provide the City proof of approval, by the AHJ Fire Department, of access roadway elements including, but not limited to: the end terminus, pavement materials, and grade.

M. Parking spaces within an automotive repair facility or service station may be counted as required parking spaces as long as they are independently accessible.

The following design features are not City requirements but are recommended practices:

N. Parking bays should be no more than 300 feet in length. Cross-aisles or turnarounds should be provided in order to avoid long dead-end aisles.

O. End islands should be used to delineate primary traffic aisles and to protect cars parked at the end of parking bays from turning vehicles. Concrete islands in lieu of painted areas should be provided in order to prevent vehicles from parking in such areas and thereby obstructing sight distance triangles (see Figures 9-2 through 9-6 in Appendix B of this manual). The UDC should also be consulted regarding landscape requirements within parking lots.

P. Parking is discouraged along entrance drives and should be limited adjacent to major circulation aisles of large developments and major retail centers.

Q. Parking spaces should be located in such a manner as to be convenient to the uses which they serve. No more than ten (10) percent of all the spaces should be located in the service areas at the rear of shopping centers and other locations with poor pedestrian access to the building entrances.

R. At least 40 percent of the required parking spaces at service stations or convenience stores with gasoline pumps should be spaces which do not abut air, water, or vacuum facilities.

9.3 LOADING

Requirements for loading spaces are provided in Article 3, Section 3.4.7(E)(2) of the City of Bee Cave UDC. Additional design criteria are provided below.

A. Each off-street loading space shall consist of a rectangular area not less than 12 feet wide and 45 feet long, with a vertical clearance of not less than 15 feet.

B. Freight loading and trash collection facilities should be designed and located to minimize intermixing of truck traffic with other vehicular and pedestrian traffic on site. Such facilities shall be located off the main access and parking aisles and away from all pedestrian corridors. Trash dumpsters shall be located to provide adequate access and maneuverability for service vehicles.

C. Maneuvering areas for loading facilities shall not conflict with parking spaces or with the maneuvering areas for parking spaces. Public right-of-way shall not be used for maneuvering. All maneuvering shall be contained on-site.

D. Rear-loading freight docks are greatly preferred to side- loading docks. For such rear-loading docks, truck circulation patterns and dock positions should be designed for left-side, back-in maneuvers to allow for better driver visibility (see Figure 9-7 in Appendix B of this manual). The apron space should be adequate

to allow the truck to back and pull-out in one (1) maneuver. Where semitractor/trailer combinations are expected, the critical maneuvering and circulation areas shall be designed to accommodate trucks with a WB-50 design (see Appendix E - Turning Movement Templates).

E. Service stations, convenience stores and other outlets where fuel is dispensed must provide an adequate maneuvering and unloading area for fuel delivery vehicles. Such facilities or areas shall be designed to enable trucks to deliver fuel without interfering with on-site parking, queuing areas, internal circulation or driveway access.

TABLE 9-1 PARKING LOT CRITERIA

A	B	C	D		E	F	
Angle of Parking (degrees)	Width of Stall	Depth of Stall 90° to Aisle	Width of Aisle		Width of Stall Parallel to Aisle	Module Width	
			One Way	Two Way		One Way	Two Way
Standard Parking Spaces							
30	8′6″	16′	13′	—	17′	45′	—
30	9′	16′	12′	—	18′	44′	—
45	8′6″	17′	16′	—	12′	50′	—
45	9′	17′	14′	—	12′9″	48′	—
60	8′6″	18′6″	17′	—	9′10″	54′	—
60	9′	18′6″	16′	—	10′5″	53′	—
75	8′6″	18′6″	21′	—	8′10″	58′	—
75	9′	18′6″	18′	—	9′4″	55′	—
90	8′6″	17′6″	—	27′	8′6″	—	62′
90	9′	17′6″	—	25′	9′	—	60′
Compact Parking Spaces							
45	7′6″	15′11″	13′	18′	10′7″	45′	50′
60	7′6″	16′8″	18′	—	8′8″	52′	—
75	7′6″	16′5″	18′	—	7′10″	51′	—

90	7′6″	15′	—	18′	7′6″	—	48′
Parallel Parking Spaces							
0	8′6″	8′6″					
(Width)	12′6″	25′	22′				
(Length)	30′	42′					

9.4 QUEUING

Queuing spaces or queuing areas shall be designed in accordance with the following criteria for uses as required by Article 3, Section 3.4.2 of the City of Bee Cave UDC.

A. Queue spaces or queuing areas may not interfere with parking spaces, parking aisles, loading areas, internal circulation or driveway access.

B. Each queue space shall consist of a rectangular area not less than 10 feet wide and 18.5 feet long with a vertical clearance as specified in the Building Code. Queue spaces are not interchangeable with parking spaces.

C. A 12-foot by-pass lane may be required adjacent to queue lines to allow vehicles an opportunity to circumvent the drive-through activity and exit the site.

D. Although drive-through activities are not required to be completely separated from other activities on site, the queuing areas should be designed to enable the driver to readily identify and distinguish queuing areas from other activities on site. It is strongly recommended to locate queue lines and service areas towards remote areas of a site to avoid conflicts with parking and circulation areas. Queue areas and drive-through facilities shall be clearly identified with the appropriate signing and marking.

E. Queuing areas for service station islands and fuel dispensing pumps shall be designed according to Figure 9-8 in Appendix B of this manual. The minimum queuing requirement dimension is measured from the ends of the service island or protective bollards. By-pass lane(s) are required to provide on-site circulation. Parallel adjacent islands with three (3) or more pumps on each island shall maintain a circulation aisle between queuing spaces or other obstructions. Specific requirements may vary based upon individual site design. Consult with the City of Bee Cave Planning & Development Department for specific requirements prior to site design.

F. Spaces within an automobile washing facility or drive-through lubrication service may be counted toward the queuing requirement.

9.5 INTERNAL CIRCULATION

Internal Circulation shall be designed in accordance with the following criteria:

A. The minimum separation between the edge of the street pavement and the first conflict point within a parking area shall be determined according to the requirements listed in the Section 5 of this manual.

B. Entry driveways equipped with controlled access gates must provide a minimum of 40 feet of storage space measured from the gate to the property line. A different storage length may be required by the Director of the Planning & Development Department if a study warrants. Additional storage space may be required if indicated by a TIA or traffic report, as requested by Planning and Development Department.

C. All semicircular drop-off driveways shall be designed to operate in one (1) direction only. Figure 9-9 in Appendix B of this manual provides specific design criteria for semicircular drop-offs.

D. All internal circulation and queuing areas must be designed to accommodate the turning radii of the vehicles that will be using the site. The critical design criteria are provided by the American Association for State Highway and Transportation Officials (AASHTO) for various design vehicles according to their wheelbase. The design vehicle utilized for the internal circulation route should be noted on plans.

E. The minimum width for an internal drive or circulation aisle with no parking is 20 feet for two-way traffic and 10 feet for one-way traffic. Additional width, up to 25 feet for two-way traffic and 15 feet for one-way traffic, may be required where traffic volumes are heavy or where obstructions or circuitous alignment necessitates a wider drive for clearance of turning vehicles. Fire Department access criteria must also be met.

F. Speed bumps are prohibited along routes which are designated as accessible for the disabled.

The following design features are not City requirements but are recommended practices:

G. Parking along the curb line adjacent to building fronts should be discouraged to provide for good pedestrian visibility. The designation of the building front curb as a fire lane to aid in the enforcement of the parking prohibition is encouraged.

H. The use of speed bumps to reduce internal travel speeds is discouraged for new construction. Buildings and lots should instead be configured to reduce speeds.

I. Continuous travel ways adjacent to building fronts should be no more than 400 feet in length to discourage high speeds and to reduce conflicting pedestrian and vehicular movements.

J. Internal driveways or parking aisles should intersect at angles of between 80 and 100 degrees, with 90 degrees being preferred.

K. Internal driveways or aisles that are intersected by crossing traffic should either have their centerlines aligned or offset by at least 60 feet.

L. Traffic squares or circles should carry low traffic volumes, be designed to encourage one-way traffic flow, and have no more than four intersecting driveways or aisles.

9.6 MIXED-USE PARKING (SHARED USE PARKING)

The following guidelines are intended to serve as criteria for evaluating proposals for shared parking under Article 3, Section 3.4.2(C). Under this provision, the Director of Planning & Development Department may authorize an adjustment in the total parking requirement for separate uses located on the same site or on adjoining sites if served by a common parking facility.

9.6.1 DEFINITIONS

For the purpose of these guidelines, the following definitions shall apply:

Mixed Use: A single development containing two or more significant land uses which are functionally and physically integrated and are developed under a coherent plan.

Shared Parking: Parking that can be used to serve two or more individual land uses without conflict or encroachment.

9.6.2 GENERAL REQUIREMENTS

A. Site Plan.

All requests for shared parking must be accompanied by a site plan which meets the requirements of Article 3, Section 3.5.4 of the Bee Cave UDC and includes sufficient information to identify the type and intensity of the uses which are proposing to share parking.

For projects which are subject to site plan review only because of a request for shared parking, the Director may modify the normal site plan submittal requirements if some material is determined to be unnecessary.

B. Ownership.

When first approved, the shared parking facility must be under common ownership or under the control of a single site plan. All requirements and conditions imposed upon the shared parking facility shall be listed on the site plan and shall be binding upon all subsequent purchasers.

C. Time of Submittal.

All requests for shared parking must be submitted in writing at the same time as an application for site plan review. For Commission-approved site plans, any supplemental information required by the staff in order to complete the review must be submitted at least 18 working days prior to the date on which the project is scheduled for consideration by the Planning & Zoning Commission.

D. Review Criteria.

All requests for shared parking shall be reviewed by the Director of Planning & Development Department in accordance with these guidelines and the requirements contained in Article 3, Section 3.5.4 of the Bee Cave UDC . The Director shall determine whether shared parking is feasible at the proposed site and specifying the reasons for approval or disapproval.

9.6.3 METHODOLOGY

A. Responsibility.

The preparation of a proposal for shared parking shall be the responsibility of the applicant. A preapplication consultation with Planning & Development staff is encouraged. A shared parking proposal must be prepared by a registered professional engineer or other individual with training or experience in the design of parking facilities. Statements of qualifications may be required in order to document such training or experience.

B. Analysis Methodology.

A proposal for shared parking shall be based upon methodologies approved by the Director. Any methodology other than the ULI procedure shall be thoroughly documented in a similar level of detail by a professional engineer prior to review of the parking analysis by the staff. The director shall determine the appropriateness of other methodologies for each specific application.

C. Parking Ratios.

Regardless of the methodology, City of Bee Cave parking ratios contained in Article 3, Section 3.4.2 of the UDC shall be the minimum acceptable rates for calculating peak parking requirements for each use. Reductions in the total parking requirement may be made only to reflect different hours of operation; different hourly, daily or monthly peaks; interaction among land uses; or incentives for use of transit or carpooling.

D. Internal Capture.

All assumptions for internal capture or interaction among land uses must be documented by information provided to staff during the review. The director shall determine the appropriateness of the assumptions for each specific application.

E. Auto Occupancy.

Assumptions regarding automobile occupancy rates must be documented if nonstandard ratios are used. The director shall determine the appropriateness of the assumptions for each specific application.

9.6.4 DESIGN CONSIDERATIONS

A. Compact Parking.

Compact parking is not allowed.

B. Pedestrian Linkages.

Pedestrian links between the development and shared parking areas shall be specifically designed to assure readily visible relationships between the use and the available parking. Special attention shall be paid to sidewalk design, paving materials, access across internal drives and streets and access within parking structures.

C. Distribution of Spaces.

All shared parking facilities shall be easily accessible to all land uses and adequately distributed on the site to provide the required parking for any use within 500 feet of the entrance, measured from the closest point of the parking facility. For hotel and restaurant uses only, longer distances may be considered if a commitment is made for a valet parking plan acceptable to the Director.

D. Reserved Spaces.

Parking spaces which are reserved for employees or other individuals shall not be included in shared parking unless hours of use are such that parking is available for others to use at different hours.

E. Fees and Access Controls.

Any parking fees and any access controls to a parking area (such as gates or attendants) shall be identified in the shared parking proposal.

F. Hours of Operation.

For projects using the ULI report and software, the hours of operation should be consistent with the ULI peak hour methodology.

G. Peak Hour Parking Demand.

For uses that are smaller than the minimum size listed above, 105 percent of the peak hour parking demand determined under the ULI methodology may be required in order to provide for drivers searching for available spaces. For uses that comply with the minimum size, the peak hour demand determined in a manner consistent with the ULI methodology will be used as the parking requirement.

H. Handicapped Parking.

Spaces designated for handicapped use shall be provided in a quantity equal to the sum of the minimum requirements for each individual use in the mixed-use development. Handicapped parking spaces may not be included in shared parking.

9.7 CALCULATION OF PARKING REQUIREMENTS

Off-street parking shall be provided for any addition or enlargement of an existing building or use, or any change of occupancy or manner of operation that would result in additional parking spaces being required in excess of the number of existing parking spaces. The additional parking shall be required only for such addition, enlargement, or change, and not for the entire building or use.

9.7.1 CHANGE OF OCCUPANCY

The following guidelines are used in calculating parking requirements for a change of occupancy. In all cases the existing use must either have a valid certificate of occupancy for its current use or be recognized as an established legal non-conforming use, or else the last use for which a valid certificate of occupancy is on file will be considered to be the existing use.

A. If the existing use complies with the parking requirements in Article 3, Section 3.4.2, the new use must also comply with the parking requirements in the table.

B. If the existing use does not comply with the parking requirements in Article 3, Section 3.4.2, and the new use has a required parking ratio less than or equal to the required parking ratio for the existing use, no additional parking is required, regardless of the actual number of spaces available on the site.

C. If the existing use does not comply with the parking requirements in Article 3, Section 3.4.2, and the new use has a required parking ratio greater than the required parking ratio for the existing use, the new use is not required to make up the parking deficiency for the current use, but only to provide the additional spaces needed for the new use. The number of spaces required for the new use is the number of spaces computed by Article 3, Section 3.4.2, minus the existing deficiency.

9.7.2 EXPANSION OR ADDITION

The following guidelines are used in calculating requirements for an expansion or addition:

A. If the existing use complies with the parking requirements in Article 3, Section 3.4.2, the expanded facility must also comply with the parking requirements in the table.

B. If the existing use does not comply with the parking requirements in Article 3, Section 3.4.2, the expansion or addition is not required to make up the parking deficiency for the current use, but only to provide the additional spaces needed for the expansion or addition. The total number of spaces required

for the expanded facility is the number of spaces computed by Article 3, Section 3.4.2, for the addition or expansion, plus the number of existing spaces for that use.

C. If the existing use complies with the parking requirements in Article 3, Section 3.4.2, and the addition or expansion would increase the total floor area to a level that would require a higher or lower parking ratio than the existing structure provides, the higher or lower parking ratio is applied to the total structure, not only to the addition or expansion. In this case, the expansion constitutes a "change in the manner of operation" as identified in Article 3, Section 3.4.2, and the total floor area must be considered in determining the parking requirement.

D. If the existing use does not comply with the parking requirements in Article 3, Section 3.4.2, and the addition or expansion would increase the total floor area to a level that would require a higher or lower parking ratio than the existing structure provides, the parking requirement for the expanded facility is computed in a similar manner to the preceding example; however, the existing use is not required to make up the existing deficiency in parking. The existing deficiency would be subtracted from the calculation in order to determine the total number of spaces required.

9.7.3 MULTIPLE USES WITHIN A STRUCTURE

In general, when there is more than one use within a structure, the parking requirement will be based on the primary use within the structure, as determined by the Building Official, unless:

A. The uses have separate outside entrances and are not connected by any internal doors, or

B. The Building Official determines that the uses are functionally separate.

SECTION 10. STRUCTURES IN THE RIGHT OF WAY AND IN EASEMENTS

10.1 GENERAL

This section presents structural design criteria for retaining walls, bridges, culverts, and stormwater drainage pipe to be constructed in the right-of-way and in easements. Structural design of electric distribution and mass transit facilities and hydraulic design of structures for stormwater drainage are presented in other Criteria Manuals.

10.2 ABBREVIATIONS

AASHTO: American Association of State Highway and Transportation Officials

ACI: American Concrete Institute

ASTM: American Society for Testing and Materials

FHWA: Federal Highway Administration

MSE: Mechanically Stabilized Earth

NCMA: National Concrete Masonry Association

10.3 RETAINING WALLS

10.3.1 DEFINITIONS

A. Conditional/Incomplete Design

In a "conditional" design, the designer defers essential elements of the design to someone else. An example of conditional design is one in which, by a note on the drawings, the designer makes the contractor responsible for determining whether the subsurface materials will support the applied wall footing loads. An "incomplete" design does not address all of the requirements in this section. An example of incomplete design is one in which the designer checks only internal wall stability, with the implication being that someone else will check external stability.

B. Construction Waiver

A construction waiver grants the owner of abutting private property permission to construct, in the right-of-way, a minor structure that is non-standard or is of benefit only to that property. The waiver attaches to the property, being recorded with the county record of deeds. Construction waivers exempt the city from maintaining the structure and from financial liability for property damage or personal injury associated with the structure.

C. City Engineer

The City Engineer of the City of Bee Cave or the designee.

D. Excavation/Backfill Zone

The excavation/backfill zone of a utility is the wedge-shaped area above the utility formed by two inclined planar surfaces, one on each side of the utility, sloping upward at a 45-degree angle (.785 rad) (1 to 1 slope) from the outermost edge of the utility to the ground surface.

E. Fascia Wall

A fascia wall is constructed over the face of a stable slope to enhance its appearance or to protect the slope from degradation due to weathering. The slope may be stable naturally or may be made stable by nailing or other forms of reinforcement. Fascia walls do not contribute to the overall stability of the slope.

F. License Agreement

A license agreement grants a second party, such as an individual private property owner, homeowners' association or corporation, permission to use public right of way for a permanent structure that requires maintenance or that poses unusual risk to the city. The license agreement exempts the city from maintaining the structure and from financial liability for property damage or personal injury associated with the structure.

G. Mechanically Stabilized Earth Retaining Wall

A mechanically stabilized earth retaining wall is composed of facing units and metal strips or geosynthetic (geogrid) reinforcement connecting to the facing units and extending behind the wall into special backfill. The stability of these walls depends on the interaction of the facing units, strips or geogrid, and backfill, acting as a system.

H. Non-Standard Retaining Wall

A non-standard retaining wall is any wall not meeting the definition of a standard wall.

I. Product-Specific Information

Product-specific information describes the behavior, performance characteristics or qualities of a material or interacting materials or components and is based on results of standardized tests.

J. Retaining Wall

A retaining wall is a structure used to support a soil or rock embankment or slope in a vertical or near-vertical configuration in which it would otherwise be unstable because of gravitational forces or applied loads.

K. Tie-backs, Soil or Rock Nail

Tie-back retaining walls generally refer to walls that consist of post-tensioned anchors, that have been placed in pre-drilled holes, and then grouted in place.

Nailing is the reinforcement of slopes by installing anchors in horizontal or near-horizontal, pre-drilled holes in the soil or rock, usually followed by shotcreting of the slope face. The anchors are not tensioned although they may be proof-tested to confirm the efficiency of the anchor/grout/soil or rock interaction. A fascia wall usually covers the shotcrete surface.

L. Standard Retaining Wall

A standard retaining wall is a free-standing, cantilever or counterfort wall consisting of cast-in-place, reinforced concrete designed according to AASHTO *Standard Specifications for Highway Bridges*, latest edition.

M. Tiered Walls

Retaining walls constructed one behind the other, each wall creating a bench or step, resulting in a terraced slope.

N. Utility Assignments

The pre-assigned horizontal and vertical positions of the utilities in the street right of way or easement.

O. Wall Height

The vertical distance from the bottom of the footing, or lowest structural component, to the top of the wall measured along the exposed face of the wall.

P. Wall Systems

Retaining walls whose performance relies on multiple components acting together as an integral unit. Examples are mechanically stabilized earth retaining walls and walls of any type with underdrains, filter media and porous backfill.

10.3.2 USE OF STANDARD/NON-STANDARD WALLS

Standard retaining walls will routinely be permitted in the street right of way or easement provided the requirements in this section have been satisfied. Non-standard walls will be considered on a case-by-case basis and may be permitted by the City Engineer, depending on wall type, wall height and layout, proximity to buried utilities, industry acceptance, availability of test data covering characteristics and performance of the proposed materials and documented long-term performance of similar walls in similar applications.

10.3.3 GENERAL REQUIREMENTS

Retaining walls, regardless of type or height, must be designed by engineers licensed in the State of Texas, using current industry standards and accepted engineering practices. Retaining walls, regardless of type, must be constructed of materials meeting City of Bee Cave *Standards and Standard Specifications*, where applicable, or ASTM or AASHTO materials and test specifications. Walls for which there are no published, nationally recognized, design criteria or for which there are no ASTM or AASHTO materials or test specifications will not be permitted.

Conditional or incomplete designs will not be accepted for city review. All aspects of design must be addressed and clearly conveyed in the drawings and specifications.

Tiered walls and back-to-back walls will be permitted only under special circumstances and only with the approval of the City Engineer.

Retaining walls must be designed for external and internal stability. The design must include, as necessary, the effects of water or wastewater line breaks, the effects of inundation and rapid drawdown resulting from flooding or stormwater detention or retention, including hydrostatic pressures, internal erosion, and alteration of engineering characteristics and behavior of foundation and backfill materials. The walls must be designed to support, where applicable, surcharge loads from traffic or structures and lateral loads from nearby guardrail or street light footings. Wall design must consider scour at the base, where appropriate.

Walls consisting of pre-cast segmental units, whether these units are facing or structural elements, must have a coping or capstone at the top of the wall. The coping may be pre-cast or cast in place. The coping or capstone must extend above the adjacent ground at least 4 inches (100 millimeters). If cast in place, the coping must be reinforced and must have control and expansion joints to accommodate differential movements in the wall. Pre-cast coping and capstone must be affixed to the upper layer of segmental wall by using epoxy, non-shrink grout or other methods or material as recommended by the manufacturer, appropriate for the material and installation.

Walls constructed using flexible facing elements, such as welded or woven wire, will be permitted only in drainage channel applications not affecting or related to roadway embankment. Metal prefabricated modular walls will not be permitted.

Where retaining walls are used as the exterior walls in stormwater retention structures, the walls must be cast-in-place reinforced concrete made watertight by using water stops in joints and using underdrains behind the walls, as necessary. Where retaining walls are used as the exterior walls in stormwater detention structures and the walls are not watertight, then the walls must be designed to provide free drainage of the backfill following drawdown.

10.3.4 WALL LOCATION AND LAYOUT

A. General

The city will assume maintenance responsibility only for those walls that support roadway embankment in street right of way or support channel slopes in drainage easements. Retaining walls that support private property must be built on private property and must be privately owned and maintained. Only in special cases approved by the City Engineer will retaining walls that support private property be allowed in public right of way. License agreements will be required for all retaining walls in the right of way that support private property.

In street right of way, a minimum of 36 inches (1 meter) of protective soil or rock cover must be provided over the upper layer or row of external structural components such as geogrid, strips, bars, tie bars or buried pre-cast units.

Utility mains and service lines must not pass through or under a retaining wall unless the utility is installed in an encasement pipe meeting the approval of the affected Utility. The encasement pipe must extend beyond the retaining wall a sufficient distance to insure that future excavation to expose the ends of the casing will not endanger any external structural component of the wall, will not threaten the stability of the wall itself and will not encroach upon any components of the wall system. For utility services, the encasement pipe must extend from the main to the property line and must be large enough to pass valves, connections, couplings and other components that are integral parts of the service.

B. In Streets and Utility Easements

Utilities, utility appurtenances, and pavements have priority over retaining walls in street right-of-way and utility easements. As a consequence, retaining wall layout must take into account utility assignments in addition to allowing for future utility installation and future excavation for utility maintenance and repair, including mains as well as services. No component of the retaining wall that is essential to the stability of the wall or wall system (such as footings, underdrains, strips, geogrid, bars, tie bars, or buried pre-cast units) can be within the excavation / backfill zone of any utility main or service regardless of the type of utility. The wall or wall system must be stable under any scenario involving utility excavation in the excavation / backfill zone. External components of the retaining wall, such as geogrid, anchors, strips, tie bars or buried pre-cast units, which are essential to stability of the wall, cannot extend beyond the back of curb, under the street, or into utility easements unless the external components are at least 10 feet (3 meters) below the street surface and at least 3 feet (1 meter) below the deepest utility.

The distance between the street-side face of the wall and the back of curb must be such that sidewalk and ramps can be accommodated, but in no case can this distance be less than 5 feet (1.5 meters), with provisions for pedestrian and vehicular railing, as needed.

10.3.5 STRUCTURAL REQUIREMENTS

Retaining walls must be designed according to Division I Section 5 of AASHTO *Standard Specifications for Highway Bridges*, latest edition. The following additional requirements apply, depending on type of wall.

A. Design Life

Design must be based on a 100-year service life that, from a structural standpoint, is essentially maintenance-free.

B. Cast in Place Concrete

Joints, including waterstops where applicable, must be provided according to ACI *Manual of Concrete Practice* Standard 224.3R Chapter 8.

C. Conventional Segmental Gravity Walls (without mechanically stabilized backfill)

Internal stability of segmental gravity retaining walls without mechanically stabilized backfill (mortared or dry-stack rock, boulders or pre-cast concrete units) must be analyzed according to NCMA *Design Manual for Segmental Retaining Walls*, latest edition. The minimum factor of safety for internal shear capacity must be at least 1.5 if product-specific information is available; otherwise, it must be at least 4. External and overall, or global, stability shall be analyzed according to AASHTO *Standard Specifications for Highway Bridges*, latest edition.

D. Tie-backs, Soil and Rock Nailing

Tie-back walls must be designed according to PTI, Recommendations for Prestressed Rock and Soil Anchors, most current edition.

Soil and rock nail walls must be designed according to FHWA *Manual for Design & Construction Monitoring of Soil Nail Walls* and the University of Texas Center for Transportation Research Report 1407-1F, *Rock Nail Design Guidelines for Roadway Cuts in Central Texas*. Steel anchors must be corrosion-protected by epoxy coating or by encapsulation. Steel anchors protected only by grouting will not be permitted. In all cases, rock nails must be used in conjunction with shotcrete and a fascia wall.

Surface drainage must be prevented from infiltrating behind the wall or flowing over the wall by installing an interceptor ditch behind the top of the wall. To control groundwater seepage, composite geosynthetic face drains must be installed on the exposed rock face before shotcreting. The face drains must extend the full height of the wall and must connect to a base drain that discharges from behind the wall in a manner that water is not directed onto the adjacent sidewalk or into the street.

10.3.6 MATERIAL REQUIREMENTS

Materials must meet City of Bee Cave *Standard Specifications*, where applicable. Otherwise, they must meet the requirements of the applicable Sections in Division II of AASHTO *Standard Specifications for Highway Bridges*, latest edition.

10.3.7 INTERNAL DRAINAGE

Retaining wall backfill must be free-draining, non-expansive material that is non-aggressive to external structural or drainage components. Underdrains must be provided to prevent hydrostatic loading caused by local groundwater seepage, surface water infiltration, floodwater inundation or by water and wastewater line breaks. Geotextile fabric or graded granular filters must be provided as necessary to prevent migration of fine-grained soil

particles from the surrounding soils into the backfill and drainage media. The fabric or granular filter must be designed not only to prevent migration of fine-grained soil particles but also not to become clogged by those particles. Underdrains must not discharge where drainage can flow onto adjacent sidewalk or into the street.

10.3.8 EXTERNAL (SURFACE) DRAINAGE

Surface runoff that flows toward the retaining wall from the retained slope must be collected in a vegetated or paved interceptor ditch behind the wall and transmitted to a stormwater inlet or let-down structure to prevent water from flowing over the wall, collecting in low points behind the wall or eroding the slope at the ends of the wall.

10.3.9 MAINTENANCE PROVISIONS

A 20-feet (6 meters) wide truck-accessible maintenance access zone must be provided at the base of walls higher than 10 feet (3 meters) that support roadway embankment. The maintenance access zone must be free of obstacles to vehicles, relatively smooth and level, all-weather accessible, and able to support loads from maintenance vehicles. The maintenance access zone may consist of easement or right of way, or both.

10.3.10 SAFETY PROVISIONS

Handrail must be provided on any wall that supports roadway embankment where the wall height exceeds the distance between the street-side face of the wall and the closest edge of the sidewalk or, in the absence of a sidewalk, the back of curb. Handrail must be provided on any wall not supporting roadway embankment if the ground surface behind the wall slopes toward the wall and this surface is part of a park, playground, single or multi-family residence. A chain link fence may be preferable to and substituted for handrail in many of these installations.

A roadside barrier, such as metal beam guardrail or concrete barrier curb, must be provided wherever the height of a wall supporting roadway embankment exceeds 6 feet (1.8 meters) for local streets and 3 feet (1 meters) for collector and arterial streets, or the distance between the back of curb and street-side face of the wall is less than 10 feet (3 meters), regardless of street classification. Roadside barriers must be designed according to the latest editions of AASHTO Roadside Design Guide and AASHTO *Standard Specifications for Highway Bridges*.

10.3.11 WARNING DEVICES

Walls supporting roadway embankment and having structural components (geogrid, strips, tie bars, or pre-cast units) extending behind the wall must have plaques placed in the coping or capstone along the top of the wall at intervals not exceeding 100 feet (30 meters). The plaques must be made of durable metal, at least 5 inches (125 millimeters) by 8 inches (200 millimeters), with ½ inch (12.5 millimeters) raised lettering that reads "Do not excavate between the retaining wall and street/No excave entre el muro de contención y la calle." The plaque must have at least two studs attached to the back so it can be mounted flat against the coping or capstone by inserting the studs into holes drilled into the side or top of the coping or capstone. The plaque must be set in epoxy or non-shrink grout covering the mounting surface and filling the holes.

Walls not supporting roadway embankment, but having structural components (geogrid, strips, tie bars, or pre-cast units) extending behind the wall must have warning plaques as described above but which say "Do not excavate behind the wall within _____ feet/No excave detrás del muro de contención dentro de una distancia de _____ meters."

Warning tape must be placed 6 inches (150 millimeters) above the uppermost layer of geogrid or strips used in MSE walls. The tape must be placed in a crisscross pattern on 24-inch (600 millimeters) spacing.

10.3.12 SUPPLEMENTAL CONSTRUCTION

Conduits must be installed adjacent to retaining walls that support roadway embankment wherever geogrid, tie bars, rods or pre-cast units extend behind the wall. Two 4-inch (100 millimeters) diameter, Schedule 40 polyvinyl chloride (PVC) pipes must be provided between the retaining wall and street, parallel to the back of curb along the entire wall, to provide for future installation of utilities such as communications cables. Pull-boxes must be installed at the ends of the pipe and at intermediate points, as appropriate, but in no case shall the distance between pull-boxes exceed 200 feet (60 meters).

10.3.13 GEOTECHNICAL INFORMATION

A geotechnical investigation must be performed for retaining walls constructed on fill, on soils subject to shrink/swell behavior and on soils mapped (See Garner, L. E., and K.P. Young, *Environmental Geology of the Bee Cave Area: An aid to Urban Planning* , Bureau of Economic Geology, University of Texas at Austin, Report of Investigations No. 86, 1976) as Taylor Clay, Del Rio Clay, or Eagle Ford Formation, as well as for walls higher than 10 feet (3 meters) regardless of the subsurface materials and conditions.

10.3.14 CONSTRUCTION DRAWINGS

The drawings must contain a design summary report listing the design assumptions, material properties and all factors of safety and reduction factors compared to the recommended values or criteria in the AASHTO, NCMA or FHWA design criteria, whichever applies, and in the project geotechnical report.

The retaining wall and any external structural elements, such as geogrid, tie bars or pre-cast units, must be shown on the plan and profile sheets for street, drainage and utility construction and on the site plan for drainage structures so that the location of the retaining wall and related components will be obvious to anyone reading the drawings.

The drawings must contain a separate plan and profile sheet for the wall itself, drawn to a 1 inch = 30 feet (1 to 400), or larger detail plan view and 1 inch = 3 feet (1 to 40), or larger detail profile view. The plan view drawing must show all buried utilities, structures and other constructed features, both existing and proposed, within a horizontal distance of 2 times the wall height. The following must be included: wastewater mains, services and manholes; stormwater drainage pipe, inlets, junction boxes and manholes; water mains, services and hydrants; electrical lines and services; gas mains and services; communications and entertainment lines and services; pavement curb and gutter; sidewalk; guardrail, pull boxes, sign footings, street light footings, and the limits of geogrid, strips, tie bars or nail tendons or rods and other features as required.

The profile view drawing must include the top of wall elevations, footing elevations, locations of changes in top of wall; locations of warning plaques; the elevations of each layer of geogrid, strips or tie bars, if used; the existing ground line at the base of the wall; the proposed ground line at the back of wall; all utilities shown on the plan view, and other features as required. Exact locations of existing utilities must be provided, based on "pot holing" if necessary.

The drawings must contain cross-sections of the wall at points where the wall height is maximum, where drainage structures penetrate the wall, where the utility excavation/backfill zone is most critical and where structures behind the wall fall within the zone of geogrid, strips, tie bars or pre-cast units, if used. The cross sections must be drawn to scale and must show utilities, utility excavation/backfill zone, sidewalks, pavements, wall units, backfill, filter fabric, handrail, guardrail, geogrid, strips, or tie bars, inlets, headwalls, the existing ground line, and other features as required.

Typical sections of the wall must be provided, showing all components necessary to construct the wall and appurtenances.

Details of appurtenances such as handrail, guardrail and headwalls, must be included in the drawings.

10.3.15 TECHNICAL SPECIFICATIONS

Technical specifications must describe all materials that comprise the wall, using City of Bee Cave *Standard Specifications* where applicable. Specific—rather than generic—products, brands, models or styles should be referenced, if possible, and locally produced materials should be specified by producer and product designation, listing alternative sources and products. Alternately, materials may be specified by their composition and physical and chemical properties and characteristics, in which case, the design engineer and the City must approve each product, based on the contractor's submittals including the requisite test results and certifications.

The specifications must state that the contractor, producer or manufacturer are responsible for quality control testing during production or manufacture of the materials and for testing of materials for the purpose of demonstrating, before construction, that they meet the project specifications. The specifications must also require that a Texas-licensed professional engineer certify that the materials meet the project specifications. Test results, including a summary comparison of the tests to the project specifications, must be submitted with the certification. The certification must be accepted by the City before construction. This testing and certification is to be performed at no cost to the City and is separate from and precedes quality control testing performed by the City during construction.

All materials that comprise the wall appurtenances, such as guardrail and handrail, must be described.

The specifications must state that chipped, cracked or honeycombed pre-cast concrete units, and marred or damaged geosynthetic, metal straps, tie bars or other components must not be incorporated into the project.

10.3.16 SHOP DRAWINGS/MATERIALS TESTS

The specifications must require submittal of shop drawings, concrete mix designs, and other technical information, as required, for pre-cast wall components, geogrid, strips, tie bars, filter fabric and other components of non-standard walls.

10.3.17 CHANGES IN DESIGN OR MATERIALS

Material substitutions or changes in wall components, design or configuration are not permitted after the City has issued a development permit unless revised drawings and, if required, revised technical specifications are submitted for City review and approval before construction.

10.3.18 LICENSE AGREEMENTS/CONSTRUCTION WAIVERS

License agreements are required for all retaining walls in the right of way that do not support roadway embankment or drainage channel slopes.

Construction waivers may be granted for retaining walls less than 3 feet (1 meter) high and not supporting roadway embankment.

10.4 BRIDGES

10.4.1 STRUCTURAL REQUIREMENTS

Bridges must be designed according to the latest edition of AASHTO *Standard Specifications for Highway Bridges* or AASHTO *LRFD Bridge Design Specifications*.

10.4.2 MATERIAL REQUIREMENTS

Materials must meet the requirements in City of Bee Cave *Standard Specifications*, where applicable. Otherwise, they must meet ASTM and/or AASHTO requirements.

10.5 CULVERTS/STORMWATER DRAINAGE PIPE

10.5.1 STRUCTURAL REQUIREMENTS

Culverts must be designed according to the latest edition of AASHTO *Standard Specifications for Highway Bridges* or AASHTO LRFD *Bridge Design Specifications*.

10.5.2 MATERIAL REQUIREMENTS

Materials must meet the requirements in City of Bee Cave *Drainage Criteria Manual* and *Standard Specifications*, where applicable. Otherwise, they must meet ASTM and/or AASHTO requirements.

SECTION 11. RULES AND DESIGN MANUAL FOR SMALL CELL NETWORK FACILITIES IN THE RIGHT-OF-WAY

11.1 PURPOSE

This section 11 ("this Rule") is adopted to administer those parts of Article 6, Section 6.6 (Wireless Telecommunication Facilities) of the Bee Cave City Code exercising the City's authority to manage and regulate the private use of City public right-of-way by small cell wireless network providers as that use is granted by Chapter 284 of the Texas Local Government Code.

This Rule sets forth process, terms, and conditions for requesting and permitting the use of City public right-of-way and City-owned traffic signal poles in City public right-of-way by network providers for network nodes, node support poles, and transport facilities.

This Rule also sets forth design parameters, limits, and standards that include aesthetic and concealment requirements for network nodes, node support poles, and transport facilities intended to be placed in City right-of-way under Chapter 284 of the Texas Local Government Code whether a facility is subject to City permitting or exempt by state law.

Unless otherwise determined by the director in writing, the terms of this Rule and all design parameters, limits, or standards set out in this Rule for network nodes, node support poles, and transport facilities, comprise the City's design manual for the purposes of Section 284.108 of the Texas Local Government Code. Unless otherwise apparent by the context and common meaning of a term, the terms used in this Rule have the meanings attributed to them by Section 284.002 of the Texas Local Government Code as those terms may be construed and further described by applicable Bee Cave City Code.

In addition to complying with City of Bee Cave City Code, in particular Article 6, Section 6.6, a network provider as that term is defined by Section 284.002 of the Texas Local Government Code, must comply with the provisions in this Rule.

11.2 GENERAL PROVISIONS: NETWORK NODES, NODE SUPPORT POLES, AND TRANSPORT FACILITIES WITHIN PUBLIC RIGHT-OF-WAY

11.2.1 NETWORK PROVIDER RESPONSIBILITIES

A. A network provider shall be responsible and liable for the acts, submissions and omissions of the network provider's employees, temporary employees, officers, directors, consultants, agents, affiliates, subsidiaries, authorized agents, authorized joint licensees, and subcontractors.

B. A network provider must submit an application to place a network node in the public right-of-way. In addition to the right-of-way permit, a network provider must follow the application process to collocate on a pole or place a node support pole in the public right-of-way. The application to place a network node in a public right-of-way can be submitted at the same time and with an application to construct a network node support pole or collocate on a service pole. Application forms are available from the director.

C. If the director determines that due to the absence or inaccuracy of essential information provided, a network provider has failed to submit an application in good faith, the submission is not an application and the director may reject the submission without an obligation to comment on completeness.

D. A network provider shall not install a facility in public right-of-way without all applicable approvals, including, but not limited to: attachment agreements, node support pole permits, temporary use of right-of-way permits, excavation permits, electrical permits, etc.

E. Accuracy and compliance of the plans is the responsibility of the network provider and the professional engineer of record. The network provider is responsible for bringing any installation into compliance with all applicable laws and regulations at any time.

11.2.2 RESTRICTIONS ON PLACEMENT

A. A network provider must obtain approval from the City before collocating network nodes or installing node support poles in an area zoned or otherwise designated as a historic district or a design district if the design district has decorative poles. Approval shall be obtained from the Planning and Zoning Department.

B. Network nodes, node support poles, transport facilities, and related equipment and facilities may not be placed in a manner that in the director's opinion: obstructs, impedes, or hinders the usual pedestrian or vehicular travel; affects public safety; obstruct the legal use of right-of-way by public utilities; violates applicable law; violates or conflicts with public right-of-way design standards, specifications, or design district requirements; violates the federal Americans With Disabilities Act of 1990; or in any way creates a risk to public health, safety, or welfare. The network provider shall be responsible for correcting the noncompliant installation.

C. Placement of network nodes, node support poles, and transport facilities must comply with undergrounding requirements that prohibit installing aboveground structures in a public right-of-way imposed by applicable ordinances, City Codes, zoning regulations, state law, public or private covenants or restrictions, or applicable criteria manuals, including this Rule, other sections of the Transportation Criteria Manual, and the Utilities Criteria Manual.

11.2.3 SIZE LIMITATIONS OF EQUIPMENT

A. Unless otherwise specified in this Rule, a network node installed on any pole within the public right-of-way must conform to the following:

1. Each antenna that does not have exposed elements and is attached to an existing structure or pole:
   - **(i)** Must be located inside an enclosure of not more than six cubic feet in volume;
   - **(ii)** May not exceed a height of three feet above the existing structure or pole; and
   - **(iii)** May not protrude from the outer circumference of the existing structure or pole by more than two feet;
2. If an antenna has exposed elements and is attached to an existing structure or pole, the antenna and all of the antenna's exposed elements:
   - **(i)** Must fit within an imaginary enclosure of not more than six cubic feet;
   - **(ii)** May not exceed a height of three feet above the existing structure or pole; and
   - **(iii)** May not protrude from the outer circumference of the existing structure or pole by more than two feet;
3. The cumulative size of other wireless equipment associated with the network node attached to an existing structure or pole may not:
   - **(i)** Be more than 28 cubic feet in volume; or
   - **(ii)** Protrude from the other circumference of the existing structure or pole by more than two feet;
4. Ground-based enclosures, separate from the pole, may not be higher than three feet six inches from grade, wider than three feet six inches, or deeper than three feet six inches; and

5. Pole-mounted enclosures may not be taller than five feet.

B. The following types of associated ancillary equipment are not included in the calculation of equipment volume under subsection A:

1. Electric meters;
2. Concealment elements;
3. Telecommunications demarcation boxes;
4. Grounding equipment;
5. Power transfer switches;
6. Cut-off switches; and
7. Vertical cable runs for the connection of power and other services.

C. Equipment attached to node support poles may not protrude from the outer edge of the node support pole by more than two feet.

D. Equipment attached to a utility pole must be installed in accordance with the National Electrical Safety Code, subject to applicable codes, and the utility pole owner's construction standards.

11.2.4 NO OVERHEAD LINES

No network provider shall install overhead lines connecting to a network node collocated on a service pole or a node support pole, unless approved by the director for temporary maintenance or repair not to exceed ten days. All lines, including power and transport facilities, connecting to a pole mounted network node, shall be placed in duct or conduit that is buried below ground, provided that a network node attached to a utility pole may connect to aerial transport facilities for which an attachment right has been granted for attachment to the utility pole by the utility pole owner.

11.2.5 GENERATORS NOT ALLOWED

Electric generators are prohibited in the public right-of-way to provide back-up power to a network node.

11.2.6 TREE MAINTENANCE

A network provider shall ensure appropriate clearance from any trees and obtain any required permits if tree trimming is warranted.

11.2.7 SIGNAGE

A. A network provider shall post its name, location identifying information, and emergency telephone number in an area on the network node, aerial equipment, manholes and fiber that is visible to the public but that shall not exceed 4" x 6", unless otherwise required by law (e.g. RF ground notification signs) or the director.

B. A network provider shall not post any other signage or advertising in the public right-of-way.

11.2.8 REPAIR

A network provider will promptly repair any damage to City property from the network provider's installation, placement, attachment, repair, modification, removal, operation, use, or relocation of a network node promptly and repair and return such property to its original condition. The City may opt to perform the repair and charge it to the network provider if the network provider fails to perform the repair if the unrepaired condition creates an imminent danger to the public.

11.2.9 GRAFFITI ABATEMENT

A network provider shall remove all graffiti on any of its network nodes, transport facilities, poles, or other property or equipment located in the public right-of-way.

11.2.10 NO INTERFERENCE AND NO LIABILITY

A. A network provider, by operating its network nodes, must not cause interference to the City's radio and emergency radio frequency, wireless network, traffic signal network, or communications operations.

B. Following installation or modification of a network node, the director may require a network provider to test the network node's radio frequency and other functions to confirm it does not interfere with the City's operations or equipment.

C. The City is not responsible for any inconvenience, annoyance, or injury to facilities or activities conducted by a network provider, arising from the need to repair any portion of the public right-of-way, or from the making of any necessary alteration or improvements, in, or to, any portion of the public right-of-way, or in, or to the City's fixtures, appurtenances or equipment.

D. A network provider shall maintain all its equipment and appurtenances in a timely and responsible manner.

11.2.11 ABANDONED FACILITIES

A network provider must remove all abandoned network nodes, node support poles, or transport facilities from the public right-of-way. Unless the director determines that the abandoned network nodes, node support poles, or transport facilities must be removed immediately to ensure public health, safety, and welfare, a network provider has a reasonable time to completely remove the abandoned network node, not to exceed 30 days after abandoning the network node.

11.2.12 REMOVAL REQUIRED BY CITY

A. A network provider must, at its cost, promptly disconnect, remove, or relocate a network node if the director determines that the disconnection, removal, or relocation (a) is necessary to protect the public health, safety, or welfare, or City property, (b) the network node is adversely affecting City operation or operations of City property, or (c) a network provider fails to obtain permits and certifications required by law. If there is imminent danger to the public, then the City may immediately disconnect, remove, or relocate the applicable network node at the network provider's expense.

B. A network provider shall reimburse City for the City's actual cost of removal of its network node within 45 days of receiving the invoice from the City.

11.2.13 REMOVAL OR RELOCATION BY NETWORK PROVIDER

A. If the network provider removes or relocates a network node at its own discretion, it shall notify the director in writing not less than 10 business days prior to removal or relocation. The network provider shall obtain all permits required for relocation or removal of its network node prior to relocation or removal.

B. A network provider's removal or relocation does not entitle the network provider to fee or rate refunds for network nodes that have been removed or relocated.

11.2.14 REMOVAL OR RELOCATION REQUIRED FOR CITY PROJECT

A. A network provider shall remove or relocate a network provider's facility at the network provider's cost whenever the director determines that the relocation or removal is required for the construction,

completion, repair, widening, relocation, or maintenance of public right-of-way or City or other public utility facility, or use in connection with any City construction or maintenance project.

B. If the network provider fails to remove or relocate its facility within the time period identified by the director, the City will remove the facility at the network provider's cost, without further notice, and the network provider will reimburse the City for its removal expenses (including reasonable overhead and storage).

11.2.15 NO CITY AFFILIATION

A network provider, and its employees, contractors, and agents shall not at any time represent themselves as being associated with the City of Bee Cave. A network provider shall inform any person asking of the company they work for and that it is allowed to work on service poles pursuant to state law.

11.2.16 RESTORATION

A network provider shall repair any damage to the right-of-way and City property, and the property of any third party resulting from the network provider's removal or relocation activities within 10 days following the date of removal or relocation, at the network provider's cost, including restoration of the right-of-way and property to substantially the same condition as it was immediately before the date the network provider installed its facility, including restoration or replacement of any damaged trees, shrubs or other vegetation.

11.2.17 SAFETY

A. A network provider shall use protective equipment to ensure the safety of all personnel working on the network provider's network nodes and transport facilities, as well as pedestrians and vehicular traffic. A network provider shall ensure all personnel are qualified to work in the public right-of-way. A network provider shall ensure its workers follow all appropriate safety protocols.

B. Whenever traffic is diverted, detoured, or impacted, a network provider must ensure that competent and certified individuals are on site to provide temporary traffic control. A network provider shall not perform work over an active travel lane or pedestrian route without the appropriate traffic control in place.

C. City inspectors may halt work if safety practices or City standards are violated. The City will not be responsible for any additional expenses that are incurred, to include extension of permits or investigation fees.

11.2.18 RADIO FREQUENCIES

A. A network provider must identify the proposed frequency or frequencies to be used by the network node. The director may deny the application or request a different frequency be used if use of such frequencies would interfere with City operations.

B. A network provider must provide a Radio Frequency Emission Certification for each network node by a Telecommunications Engineer certified by the International Association for Radio, Telecommunications and Electromagnetics (iNARTE) or similarly recognized certifying body with experience regarding radio frequency transmissions.

C. A network provider shall adhere to the FCC's most current federal radio frequency emissions standards set forth in OET Bulletin 65, as may be updated or amended, or other applicable regulation.

11.2.19 FACILITY INVENTORY

A. Network provider shall maintain, and provide to the director upon request, a list of its network nodes, node support poles, transport facilities, and associated equipment, in the public right-of-way.

B. Network provider shall maintain and make available to the director accurate as-built drawings of its network nodes and transport facilities in a format approved by the director and in accordance with any applicable City criteria manual.

11.2.20 UNAUTHORIZED NETWORK NODES AND TRANSPORT FACILITIES

A. The director will review proposed network nodes, transport facilities, and other equipment to ensure compliance with applicable laws.

B. The director shall deem as unauthorized any type of facility, node, or equipment not authorized by law or installed or operated in violation of law. The director at his or her sole discretion may, after providing 30 days written notice, remove or require the network provider to remove unauthorized equipment at the provider's expense without any liability to the City. The City will invoice and the provider shall reimburse the City within 45 days of receipt of the invoice for the City's cost for removal of unauthorized equipment.

C. Unauthorized equipment, if determined by the director to interfere with the normal operation of City infrastructure or public right-of-way, may be removed immediately by the City upon the expiration of 24-hours advance notice to a provider. The City will invoice and the provider shall reimburse the City within 45 days of receipt of the invoice for the City's cost for removal of unauthorized equipment.

11.2.21 INSTALLATION

A. Installation of network nodes will be done in a good and workmanlike manner and in accordance with the requirements established by the director in compliance with all applicable laws, ordinances, codes, standards, criteria, rules, and regulations.

B. Installation of a network node or network node support pole shall not interfere with the operation of City infrastructure unless approved by the City for a specific time and location. Interference with traffic signal operations may require the presence of City employees.

C. Installation or maintenance activities shall not impede traffic unless authorized by a permit.

11.2.22 ELECTRICAL SUPPLY

A. A network provider shall be responsible for obtaining any required electrical power service to the network node. The City will not be liable to the network provider for any stoppages or shortages of electrical power furnished to the network node, including without limitation, stoppages or shortages caused by any act, omission, or requirement of the City or the act or omission of any other tenant or user of the structure. The network provider will not be entitled to any abatement of any fee for any such stoppage or shortage of electrical power.

B. The network provider shall be responsible, at the network provider's expense, for correcting any discovered pre-existing non-conforming conditions related to the provision of power for a network node.

C. If the network node is to be installed on a different pole than the electric service is installed, it is the network provider's responsibility to install the necessary underground conduit and cabling to provide power to the network node.

D. Network provider shall install a device or devices to disconnect network provider's network node, such as a fused linkage, cut-off switch or similar mechanism that is capable of disconnecting and de-energize network provider's network nodes so that the City personnel performing maintenance may quickly and safely shut down the network node so that they are not exposed to dangerous electrical current or radiofrequency radiation or electromagnetic fields generated by the network node. The disconnect device must be clearly identified and easily accessed, and the operation of the cut-off switch must be obvious

and intuitive. The City will instruct its maintenance personnel to use the disconnect device to de-activate the network node while performing work in proximity to the network node.

E. Network provider electric meter may not be installed on a traffic pole, unless the director determines that placement on the traffic pole is necessary to avoid the use of right-of-way surface for the meter placement and the meter's placement is consistent with the applicable design standards.

11.3 NETWORK NODE

A network provider must submit an application in a form to be determined by the director and receive a permit to install a network node in the public right-of-way. An application to install a network node must include information that the director determines is necessary to review and approve the application, including, but not limited to:

A. A completed application on a form approved by the director, for each location requested;

B. A map showing the intended location of the proposed facility in the public right-of-way, with distances from any historic landmarks, parks, schools, or residentially zoned property, if any. This map should also include all existing utilities and surface features (including trees, street furniture, etc.) within 20 feet of the proposed node support pole location;

C. Representative drawings or pictures of the specific node location;

D. Artistic renderings, drawings, cut sheets, or pictures showing the location with network provider's equipment installed, including conduit, attachment method, and shroud; and

E. Details and graphics on the type of network facility to be installed and installation method proposed for the City's approval.

11.4 COLLOCATION ON A TRAFFIC POLE

11.4.1 ELIGIBILITY AND APPLICATION

A. Network providers may request to collocate network nodes on traffic poles provided that network nodes or associated equipment may only be installed and enclosed in the manner according to the allowed design, installation, and construction details for a traffic pole collocation shown and described in Exhibit A (Figures 1 through 7) incorporated into and attached to this Rule. For traffic poles with street light fixtures mounted by a vertical extension to the traffic pole, the director may allow an antennae to be mounted to the vertical extension supporting the street light in a manner that does not materially deviate from the construction details for a traffic pole collocation shown and described in Exhibit A (Figures 1 through 7), provided the overall height for the top of the antenna shroud is not more than 35 feet above ground level.

B. In order to minimize structural impact to the traffic pole or negative visual impact to the surrounding area, the City Engineer may deny an application for attaching to a traffic pole upon which a network node has been attached or for which a complete application for attachment has been approved or is pending approval.

C. A network node or any associated equipment may not obstruct the visibility of a traffic control device or sign. A network node or any associated equipment may not interfere in any way with the function or operation of a traffic control device or sign. Should traffic control devices or signs be added, modified, or moved, a network provider shall relocate or remove its equipment after receiving written notice.

D. Network providers shall comply with and observe all applicable City, State, and federal historic preservation laws and requirements.

E. Unless approved by the director, a network node, including any shroud or mounting structure, shall be installed a minimum of 6" above the traffic mast arm infrastructure. The upper height limit for an antenna placed atop a traffic pole is 35 feet above ground level.

F. Exposed equipment and shrouds shall match the existing pole color to the extent possible.

G. If the director determines that cable necessary to connect the components of a node located on a traffic pole cannot be located internally within the traffic pole, external cables and wires must be enclosed in conduit. The maximum number and size of conduit that may be attached to a traffic pole is two 1½" EMT conduit. External conduit attached to a traffic pole must match the color of the existing pole. External conduit should be installed flush to the pole and in an unobtrusive manner as possible. If needed, the network provider may have a one-foot radius drip loop exposed. Conduit shall be installed as to not conflict with access to any traffic signal activities.

H. An application to collocate on a traffic pole must include information that the City Engineer determines is necessary to review and approve the application, including, but not limited to:

1. A completed application on a form approved by the City Engineer, for each location requested;
2. A map showing the intended location of the proposed network node and transport facilities serving that network node in the public right-of-way, with distances from any historic landmarks, parks, schools, or residentially zoned property, if any. The map must also include all existing utilities and surface features (including trees, street furniture, etc.) within 20 feet of the proposed node support pole location;
3. Representative drawings or pictures of the specific traffic pole location.
4. Artistic renderings, drawings, cut sheets, or pictures showing the location with network provider's equipment installed, including conduit, attachment method, and shroud;
5. Details on the attachment method proposed for the City's approval. No penetration of the traffic pole is allowed;
6. A photograph of the specific traffic pole to be attached to;
7. Pole load analysis in accordance with Section 12.4.2; and
8. Construction plan sheets (11 inches by 17 inches) at a scale of no smaller than 1 inch = 40 feet in plan view, and 1 inch = 6 feet in profile view, sealed by a professional engineer licensed in the State of Texas that represents:
   - **(i)** the specific location of the existing traffic pole;
   - **(ii)** location and method of proposed installation (trench, bore, existing conduit pull) of proposed and existing transport facilities necessary to connect the network node to the PSTN;
   - **(iii)** horizontal alignment of proposed or existing fiber or conduit in relation to the proposed fiber assignment;
   - **(iv)** proposed work areas required to install infrastructure that will disrupt or divert traffic;
   - **(v)** placement of network node and equipment on the traffic pole as well as any ground equipment, cabinets, etc.;
   - **(vi)** any and all existing utilities, both underground and overhead; and
   - **(vii)** the specific location of the existing traffic pole using latitude/longitude in decimal degrees to the 6th decimal point.

11.4.2 TRAFFIC POLE LOAD ANALYSIS

A. Each application for collocation of a network node on a service pole shall include a load analysis prepared by a Texas Registered Professional Engineer and must conform to the Transportation Department's approved process and methodology.

B. The load analysis shall take into account and allow space for all attachments which are currently constructed or planned for future construction.

C. The following information is required to be submitted:

1. Specific location with X, Y coordinates and Traffic Signal Pole ID;
2. Picture of entire Traffic Signal Pole;
3. Traffic Signal Pole brand information (height and class);
4. Height of each existing attachment present on the traffic pole and proposed height of wireless attachment;
5. Identification of each attachment present on the traffic pole;
6. Detailed drawings of the proposed wireless attachments and physical specifications (weight and dimensions);
7. Electric Service Planning Application in accordance with the Bee Cave Energy Design Criteria Manual;
8. Type, height, and size of all attachments present on the traffic pole; and
9. Ownership information on all attachments.

11.4.3 INSPECTIONS

A. Authorized City employees may inspect the collocation of network nodes on a traffic pole to ensure compliance with all applicable laws. Such inspection may occur during or after construction.

B. In the event of an emergency situation, the director may, but is not required to, notify a network provider of an inspection. The City may take action necessary to resolve the emergency situation and the director shall notify the network provider as soon as practically possible after resolution is complete.

C. The director may perform visual inspections of any network nodes located in the public right-of-way as the director deems appropriate without notice. If the inspection requires physical contact with the network node, the director shall provide written notice to the network provider within five business days of the planned inspection. The network provider may have a representative present during such inspection.

11.5 NODE SUPPORT POLES AND ASSOCIATED FACILITIES

A network provider must submit an application in a form to be determined by the director and receive a permit to install a node support pole in the public right-of-way.

11.5.1 APPLICATION FOR INSTALLATION OF NODE SUPPORT POLE WITHIN THE RIGHT-OF-WAY

A. An application for placing or constructing a node support pole in the public right-of-way must be made to the Planning & Development Department in a form to be provided by the director and comply with all applicable laws and regulations, including any applicable zoning or design standards or manuals.

B. An application to install a node support pole must include information that the director determines is necessary to review and approve the application, including, but not limited to:

1. A completed application on a form approved by the director, for each location requested;
2. A map showing the intended location of the proposed facility in the public right-of-way, with distances from any historic landmarks, parks, schools, or residentially zoned property, if any. The map must include all existing utilities and surface features (including trees, street furniture, etc.) within 20 feet of the proposed node support pole location;
3. Representative drawings or pictures of the specific pole location;
4. Artistic renderings, drawings, cut sheets, or pictures showing the location with network provider's equipment installed, including conduit, attachment method, and shroud;
5. Details and graphics on the type of network facility to be installed and installation method proposed for the City's approval;
6. Justification for installation of new facility, including analysis for any nearby poles determined as unsuitable; and
7. Construction plan sheets (11 inches by 17 inches) at a scale of no smaller than 1 inch = 40 feet in plan view, and 1 inch = 6 feet in profile view, sealed by a professional engineer licensed in the State of Texas that represents:
   - **(i)** the specific location of the proposed node network pole and associated facilities;
   - **(ii)** location and method of proposed installation (trench, bore, existing Conduit pull) of proposed and existing transport facilities necessary to connect the node to provider's network;
   - **(iii)** horizontal alignment of proposed or existing fiber or conduit in relation to the proposed fiber assignment;
   - **(iv)** proposed work areas required to install infrastructure that will disrupt or divert traffic;
   - **(v)** placement of network node and equipment on the network pole as well as any ground equipment, cabinets, etc.;
   - **(vi)** any and all existing utilities, both underground and overhead; and
   - **(vii)** the specific location of the proposed node support pole using latitude/longitude in decimal degrees to the 6th decimal point.

11.6 TRANSPORT FACILITIES

A. A network provider must obtain right-of-way permits by submitting an application in a form to be determined by the director for excavation and facility installation and coordinate installation with utilities.

B. A network provider must submit an application to the Development Services Department in a form to be determined by the director and obtain a permit to construct transport facilities in the public right-of-way.

11.6.1 APPLICATION FOR TRANSPORT FACILITY

A. An application must be made to the Development Services Department and comply with all applicable laws and regulations, including any applicable zoning or design manuals.

B. An application to install a node support pole must include information that the director determines is necessary to review and approve the application, including, but not limited to:

1. A completed application on a form approved by the director, for each location requested;

2. A map showing the intended location of the proposed facility in the public right-of-way, with distances from any historic landmarks, parks, schools, or residentially zoned property, if any;
3. Representative drawings or pictures of the specific location;
4. Artistic renderings, drawings, cut sheets, or pictures showing the location with network provider's equipment installed, including conduit, attachment method, and shroud;
5. Details and graphics on the type of transport facility to be installed and installation method proposed for the City's approval;
6. Justification for installation of new facility, including analysis for any nearby transport facilities determined as unsuitable; and
7. Construction plan sheets (11 inches by 17 inches) at a scale of no smaller than 1 inch = 40 feet in plan view, and 1 inch = 6 feet in profile view, sealed by a professional engineer licensed in the State of Texas that represents:
   - **(i)** the specific location of the proposed network nodes pole and associated facilities being served by the transport facility;
   - **(ii)** location and method of proposed installation (trench, bore, existing conduit pull) of proposed and existing transport facilities necessary to connect the node to the network provider's network;
   - **(iii)** horizontal alignment of proposed or existing fiber or conduit in relation to the proposed fiber assignment;
   - **(iv)** proposed work areas required to install infrastructure that will disrupt or divert traffic;
   - **(v)** placement of facilities as well as any ground equipment, cabinets, etc.;
   - **(vi)** any and all existing utilities, both underground and overhead; and
   - **(vii)** the specific location of the existing traffic pole using latitude/longitude in decimal degrees to the 6th decimal point.

11.7 DESIGN STANDARDS

The intent of the design standards is to ensure that the installation of network nodes, node support poles, and equipment cabinets is compatible with existing land use and urban design regulations.

The design standards in this section apply to the installation of network nodes, node support poles, cabinets, and associated equipment within public right-of-way throughout the City unless more specific design elements, concealment measure, or camouflage requirements are set out for a specific design or historic district. A design district is an area within the City with a zoning classification or other City Code designation for which unique design and aesthetic standards are applied uniformly.

11.7.1 DESIGN STANDARDS CITY-WIDE

A. Site Selection - It is the City's policy to preserve as open, as much as possible, the surface and air above the public right-of-way to keep sight-lines open for public safety and aesthetic purposes. To achieve that end, permits to use the public right-of-way for network nodes and node support poles will be prioritized in the following order:

1. First, colocation on existing utility poles. The allowed design, installation, and construction details, for utility pole collocation is shown and described in the Utilities Criteria Manual.
2. Second, collocation on existing traffic poles - In order to minimize visual clutter and maintain future infrastructure availability for both the City and other projects, a maximum of two traffic

poles per intersection may be made available for network node installation. Only one antenna and base equipment cabinet may be permitted on a traffic pole.

3. Third, collocation on non-decorative streetlight poles. Network nodes may not be placed on decorative poles. The allowed design, installation, and construction details for non-decorative streetlight poles is shown and described in the Utilities Criteria Manual.
4. Last, node support poles. In order to receive a permit to install a node support pole, the network provider must demonstrate that no collocation options are available for the service area. Node support poles must be separated by at least 250 feet.

B. Equipment shall be installed in a manner that does not hinder pedestrian walkways or interfere with traffic signal equipment. All attachments to a pole that are projecting, or any equipment or appurtenance mounted on the ground, shall comply with the Americans With Disabilities Act and shall not obstruct an existing or planned sidewalk.

C. For network nodes placed on existing poles, the color of the network nodes shall match the existing pole color, such that the network nodes blend with the existing pole.

D. Where applicable, node support poles shall be placed within the planting zone in alignment with existing street trees or light poles. Poles shall be placed equidistant between street trees, with a minimum separation of 15 feet from tree to pole. The planting zone is an area adjacent to the curb in which street trees may be planted. The zone is also intended for the placement of street furniture, public utility equipment such, and similar elements in a manner that does not obstruct pedestrian access or motorist visibility.

E. Faux Treatments - Concealment may not include faux trees, faux landscaping, or other faux decorative items.

F. The network provider is responsible for all make-ready costs, whether performed by the provider, a third party or the City.

11.8 EXHIBIT A – COLLOCATION ON A TRAFFIC POLE

ANTENNA SPECIFICATIONS			
Antenna Type	Panel	Panel	Panel
Dimensions (HxWxD)	8" x 8 "X 4"	9.7" X 12.8" X 3.3"	24.3" X 12.1" X7"
Weight	9.9 lbs	11.5 lbs	13.0 lbs
Cable type	Coaxial Cable	Coaxial Cable	Coaxial Cable
Mounting	Pole or wall	Pole or wall	Pole or wall
Antenna Type	Panel	Canister (omni)	Canister (omni)
Dimensions (HxWxD)	9.7"X 12.8" X 4.7"	24.6" X 16" (dia.)	24" X 14.6" (dia.)
Weight	17 lbs	39.9 lbs	22.1 lbs
Cable type	RJ 45 or Coaxial Cable	Coaxial Cable	Coaxial Cable
Mounting	Pole or Base	Pole or Base	Pole or Base

	RF SOURCE SPECIFICATIONS			
Dimensions (HxWxD)	7.87" X 7.87" X 3.93"	20.125" X 15.912" X 7.904"	8.42"X5.9"X2.75"	8" X 13" X 6.5"
Weight	9.92 lbs	11.2 lbs	1.65 lbs	15.8 lbs
Mounting	Base	Base	Base	Base
Power Requirement (AC)	8 Amps	10 Amps	5 Amps	10 Amps

Figure 1 - Antenna and RF Source Specifications

Figure 2 - Pole Elevation

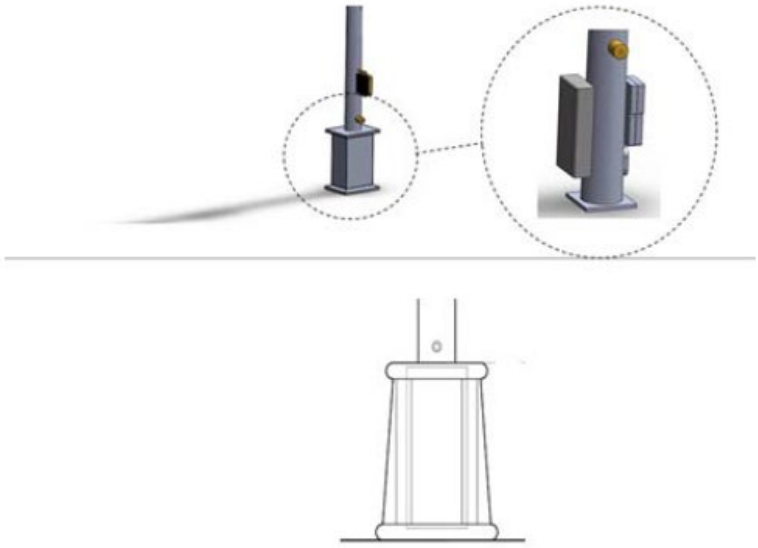

Figure 3 - Equipment Enclosure

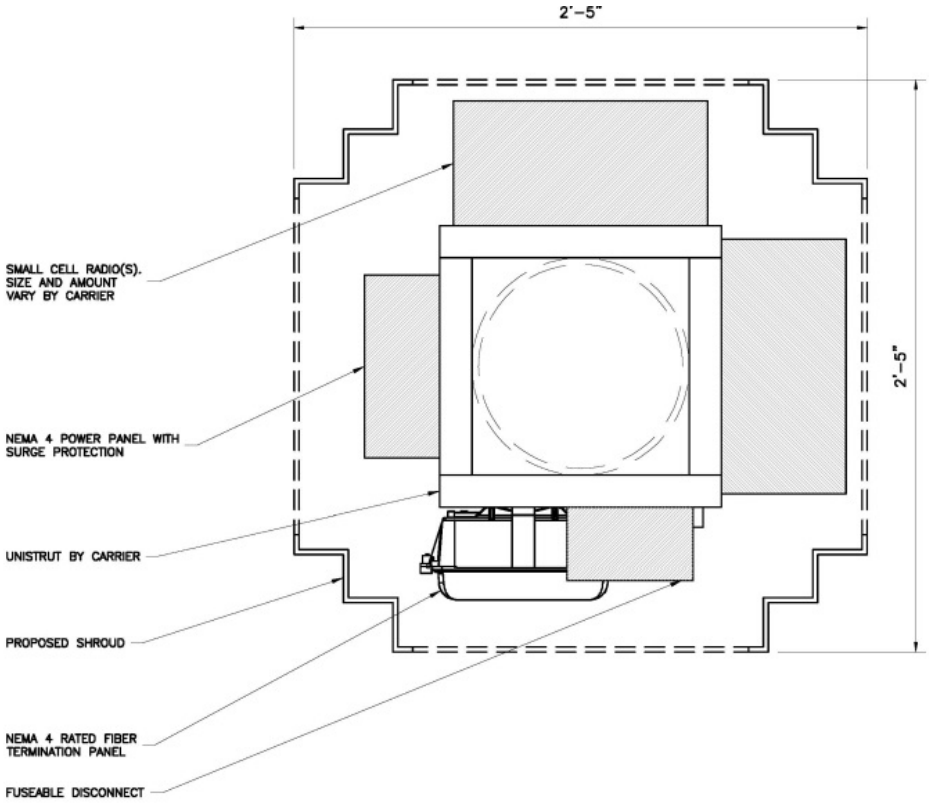

1 X-3 **EXAMPLE EQUIPMENT LAYOUT**
N.T.S.

Figure 4a - Equipment Cabinet Plan

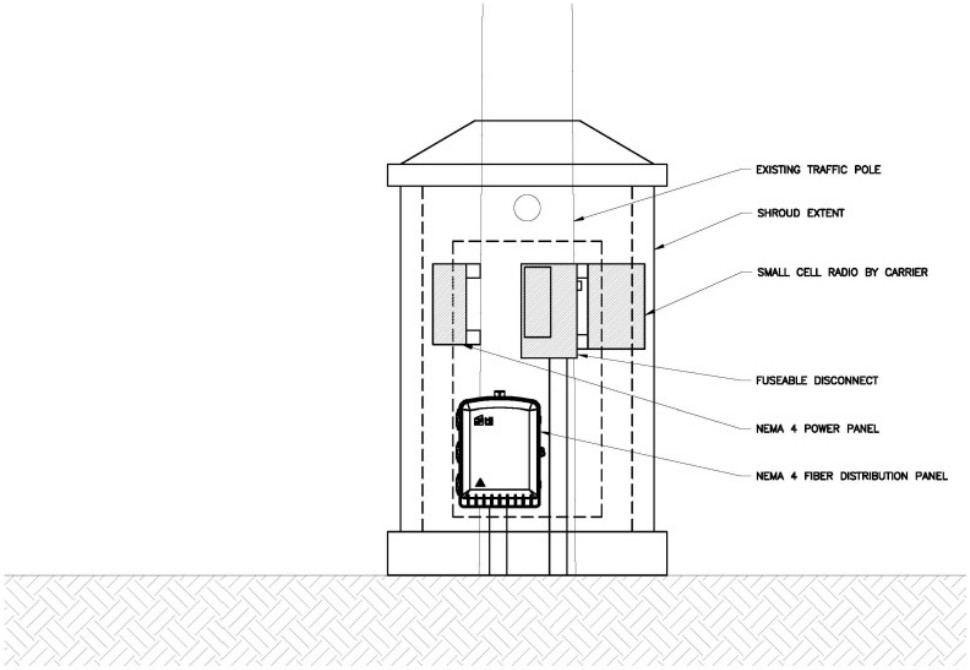

2 X-3 **EXAMPLE ELEVATION I**
N.T.S.

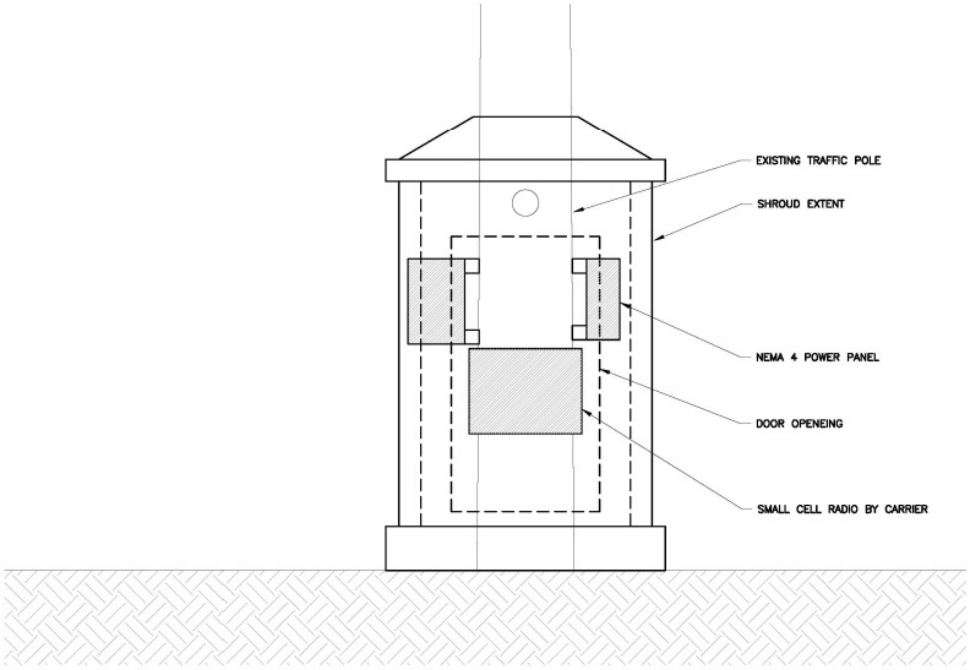

3 X-3 **EXAMPLE ELEVATION II**
N.T.S.

Figure 4b - Equipment Cabinet Elevation

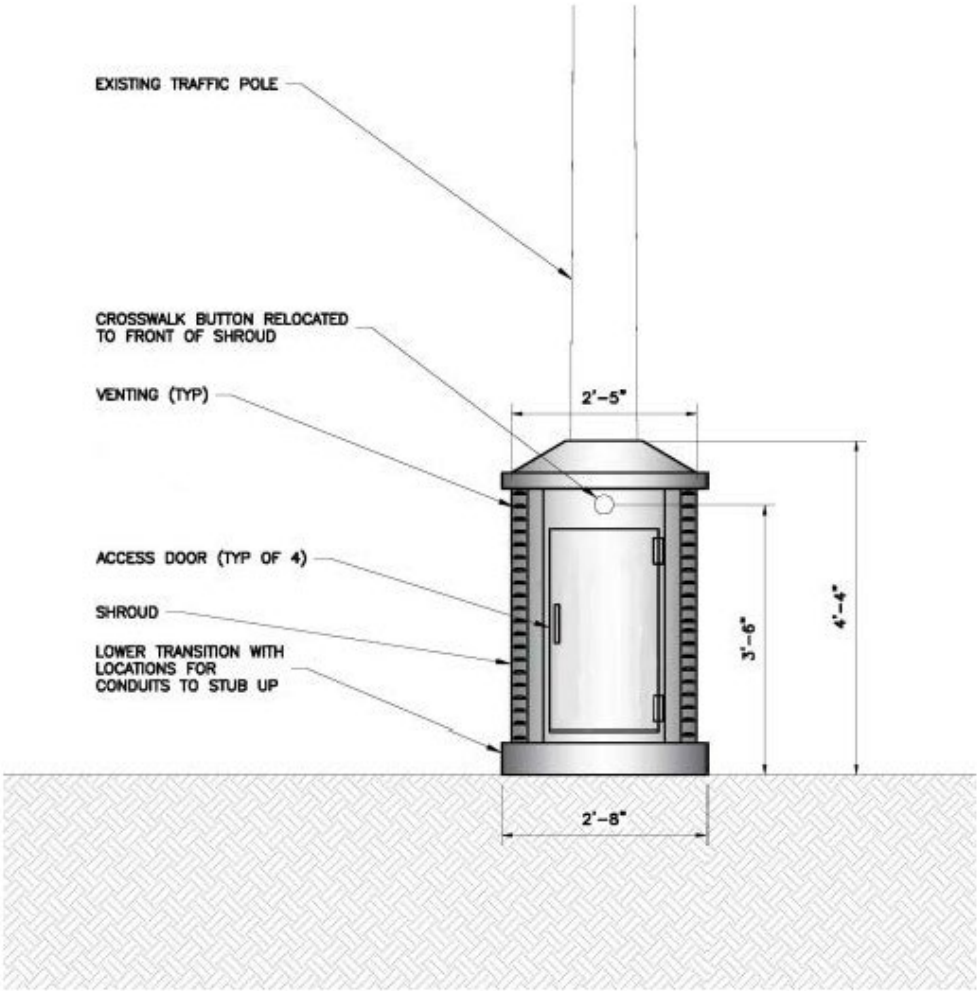

Figure 5 - Elevation

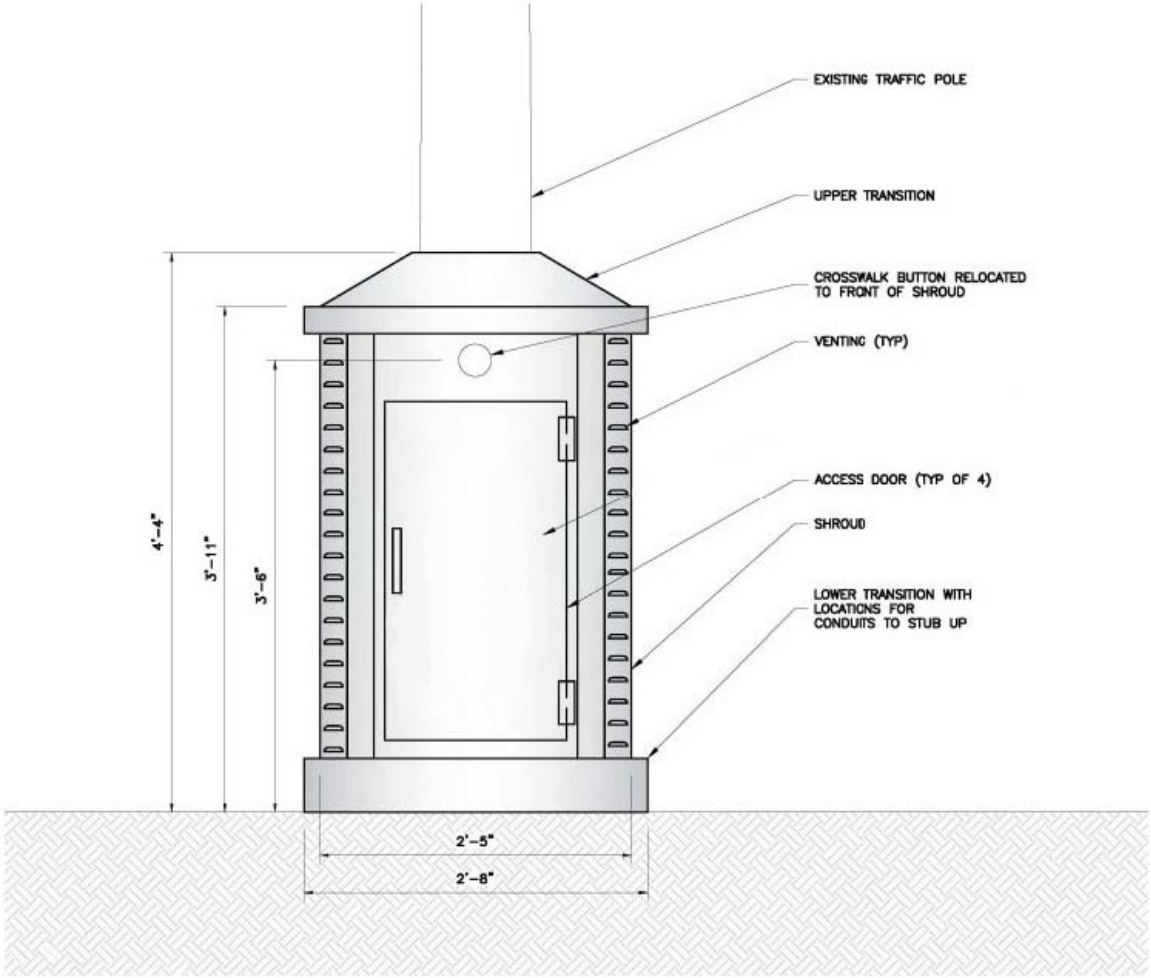

Figure 6 - Elevation Detail

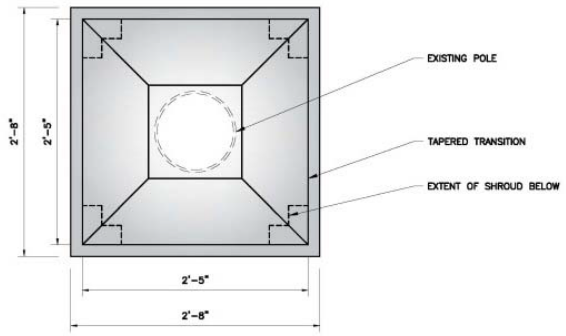

2 X-2 **UPPER PLAN VIEW**
N.T.S.

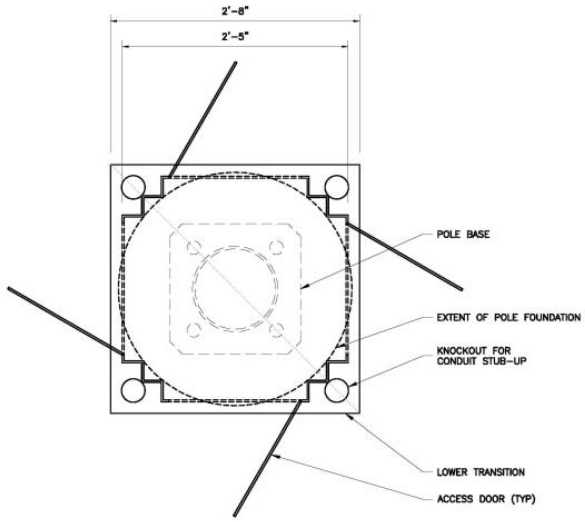

3 X-2 **LOWER PLAN VIEW**
N.T.S.

Figure 7 - Plan View

SECTION 12. APPENDICES

APPENDIX A: TURNING MOVEMENT TEMPLATES

SE Design Vehicle Turning Radius = 42′ Scale 1″=20′

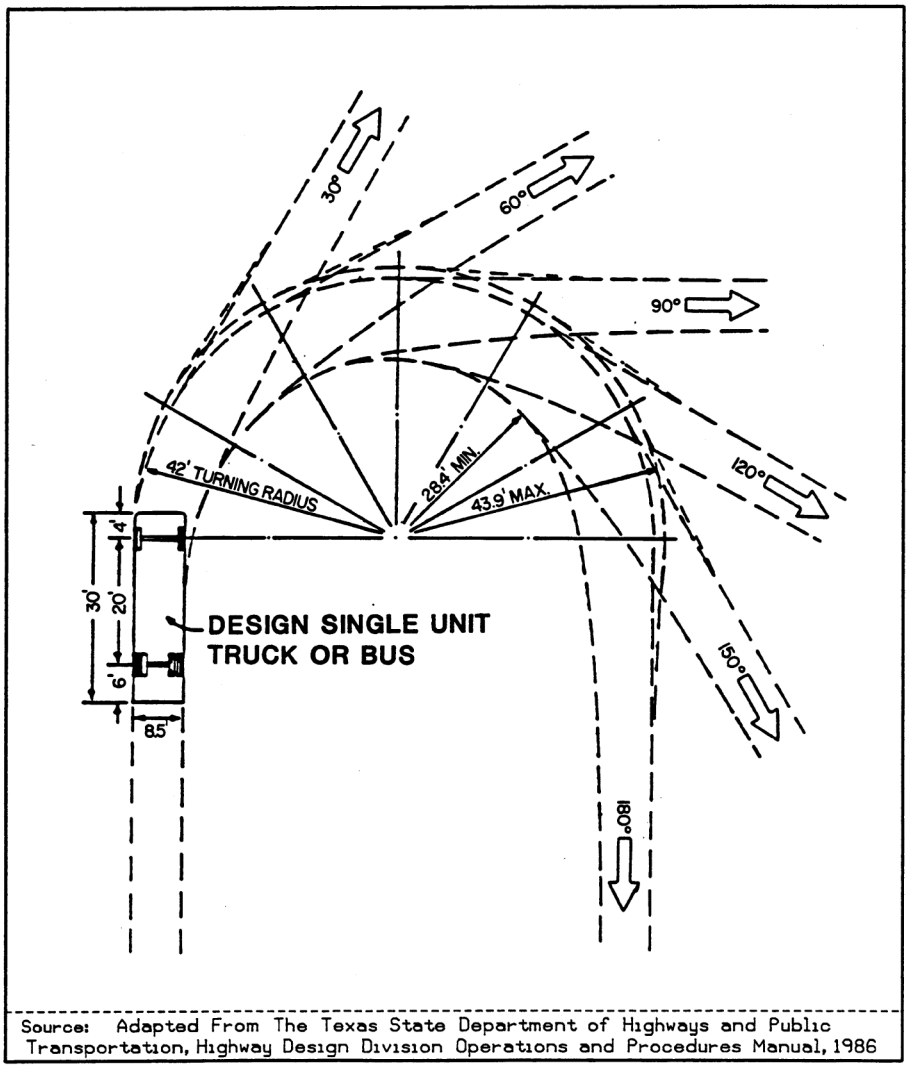

Source: Adapted From The Texas State Department of Highways and Public Transportation, Highway Design Division Operations and Procedures Manual, 1986

TURNING TEMPLATE SU Design Vehicle, 42′ Turning Radius, Scale: 1" = 20′

WB-40 Design Vehicle Turning Radius = 40′ Scale 1″=20′

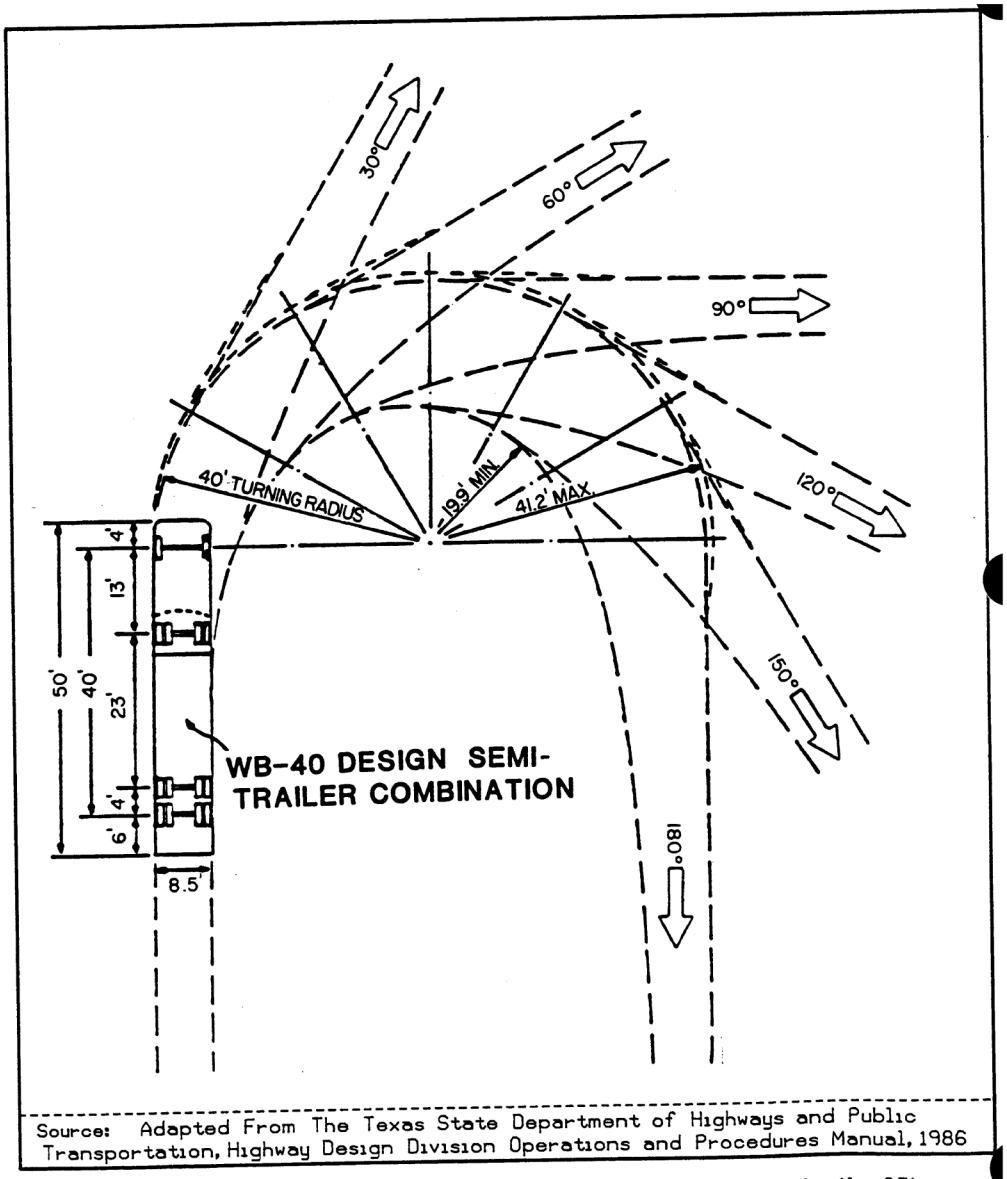

Source: Adapted From The Texas State Department of Highways and Public Transportation, Highway Design Division Operations and Procedures Manual, 1986

TURNING TEMPLATE WB-40 Design Vehicle, 40′ Turning Radius, Scale: 1" = 20′

WB-50 Design Vehicle Turning Radius = 45 Scale 1″=20′

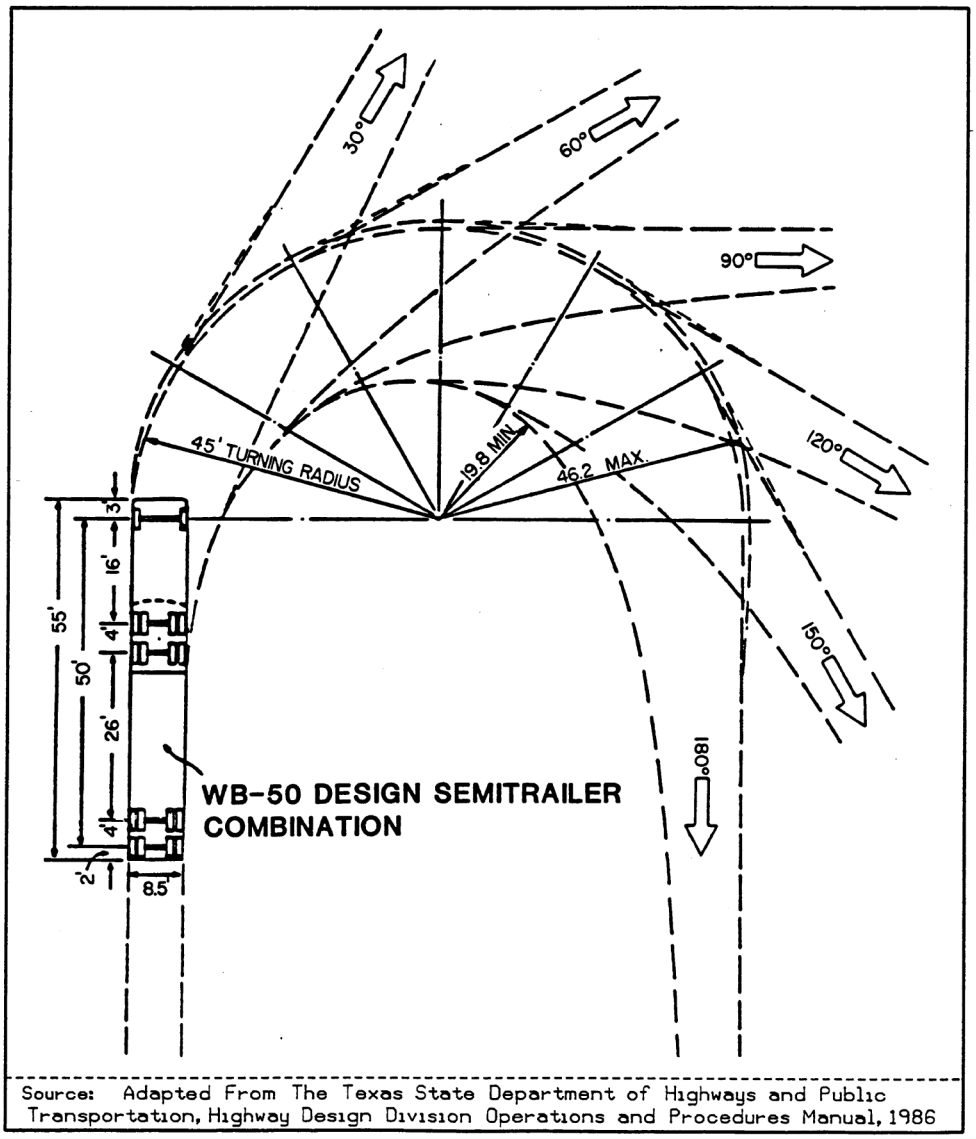

Source: Adapted From The Texas State Department of Highways and Public Transportation, Highway Design Division Operations and Procedures Manual, 1986

TURNING TEMPLATE WB-50 Design Vehicle, 45′ Turning Radius, Scale: 1" = 20′

WB-60 Design Vehicle Turning Radius = 45 Scale 1″=2-′

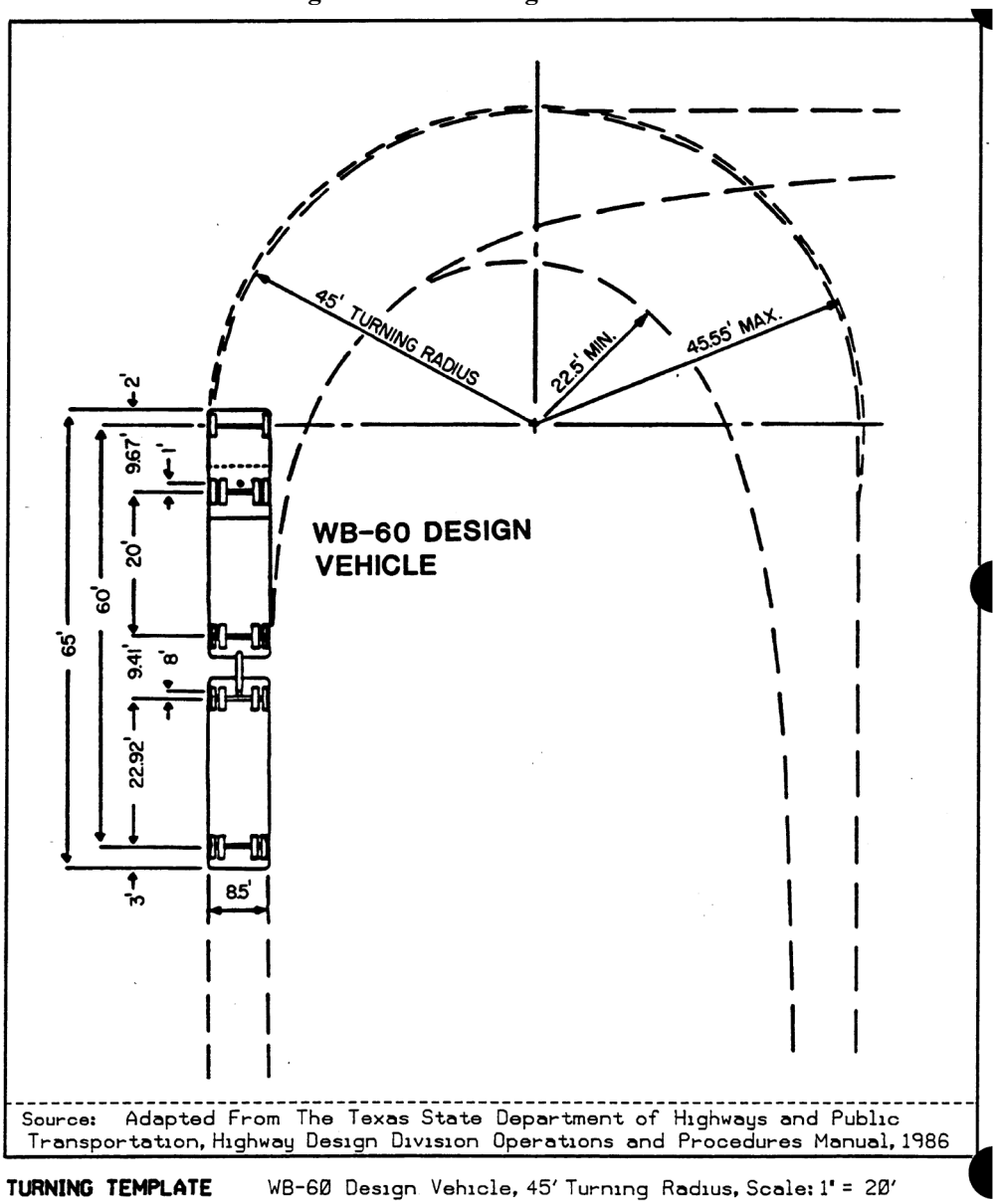

TURNING TEMPLATE WB-60 Design Vehicle, 45′ Turning Radius, Scale: 1" = 20′

SU Design Vehicle, 42′ Turning Radius, Scale 1″=40′

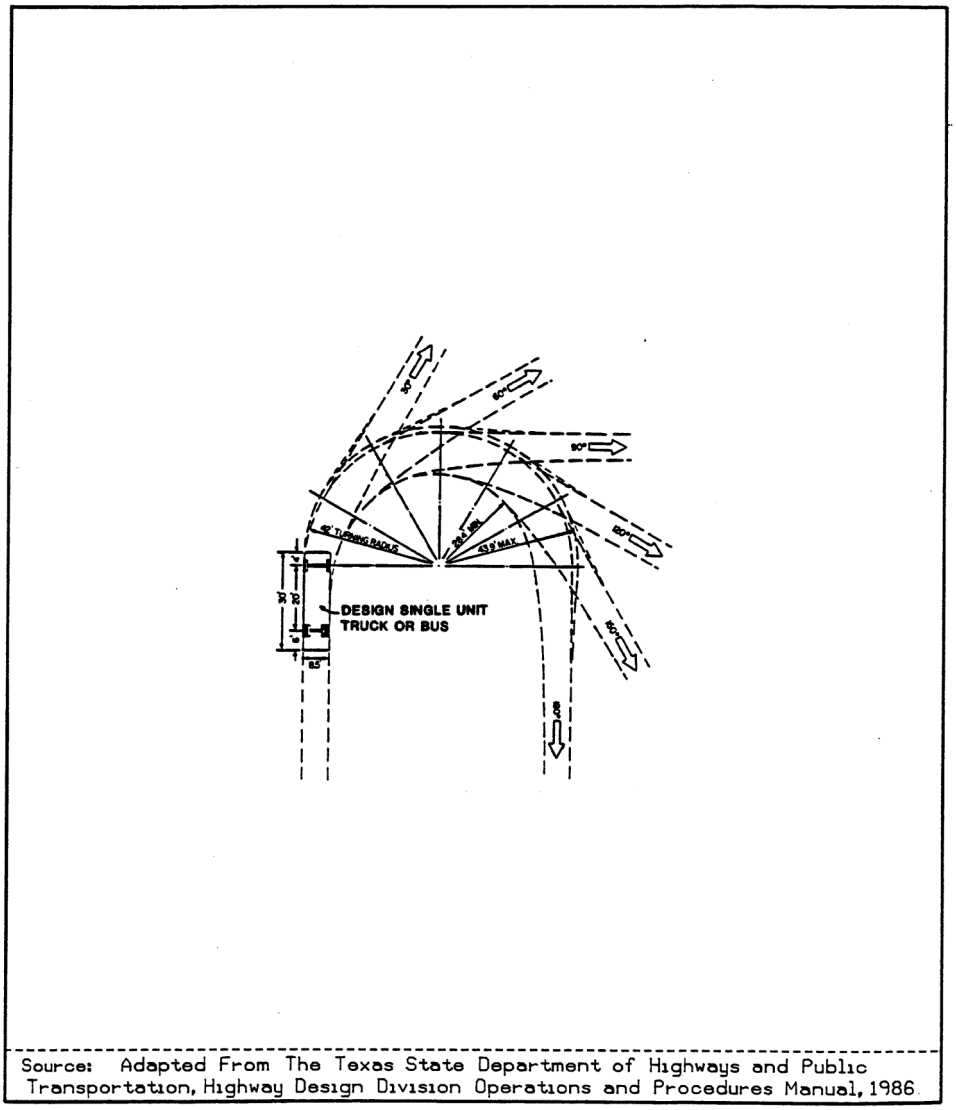

Source: Adapted From The Texas State Department of Highways and Public Transportation, Highway Design Division Operations and Procedures Manual, 1986.

TURNING TEMPLATE SU Design Vehicle, 42′ Turning Radius, Scale: 1" = 40′

WB-40 Design Vehicle, 40&prime Turning Radius, Scale 1″=40′

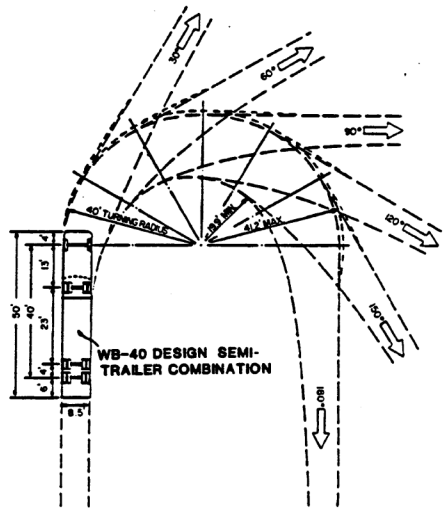

Source: Adapted From The Texas State Department of Highways and Public Transportation, Highway Design Division Operations and Procedures Manual, 1986

TURNING TEMPLATE WB-40 Design Vehicle, 40′ Turning Radius, Scale: 1" = 40′

WB-50 Design Vehicle, 45′ Turning Radius, Scale 1″=40

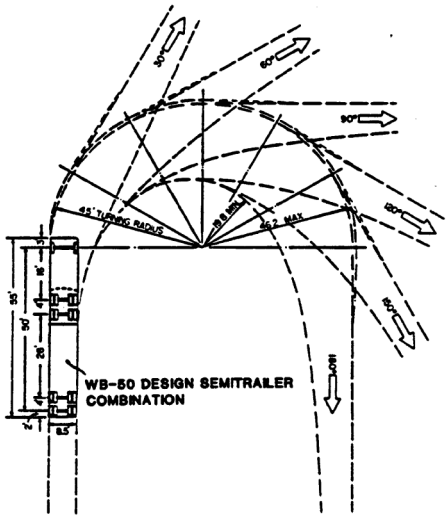

Source: Adapted From The Texas State Department of Highways and Public Transportation, Highway Design Division Operations and Procedures Manual, 1986

TURNING TEMPLATE WB-50 Design Vehicle, 45′ Turning Radius, Scale: 1" = 40′

WB-60 Design Vehicle, 45′ Turning Radius, Scale 1″=40′

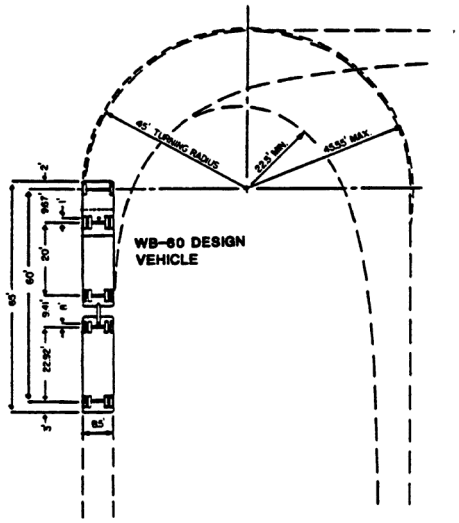

Source: Adapted From The Texas State Department of Highways and Public Transportation, Highway Design Division Operations and Procedures Manual, 1986

TURNING TEMPLATE WB-60 Design Vehicle, 45′ Turning Radius, Scale: 1" = 40′

APPENDIX B: FIGURES AND DIAGRAMS

12.1 SECTION 1

Figure 1-1 Street Network System

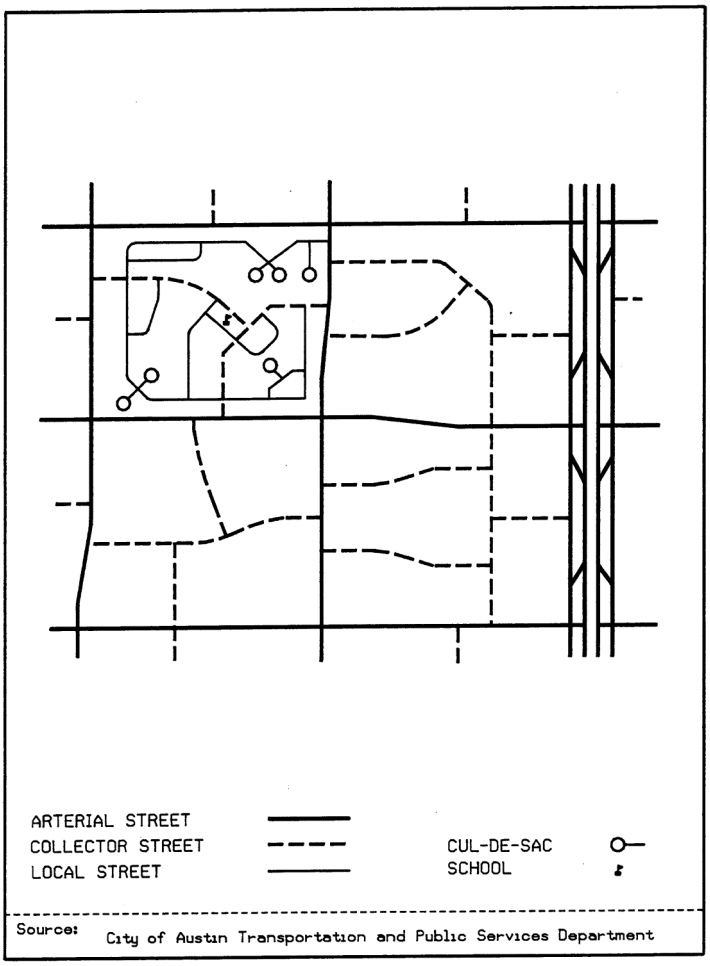

Figure 1-2 Relationship of Street Classification with Access and Mobility

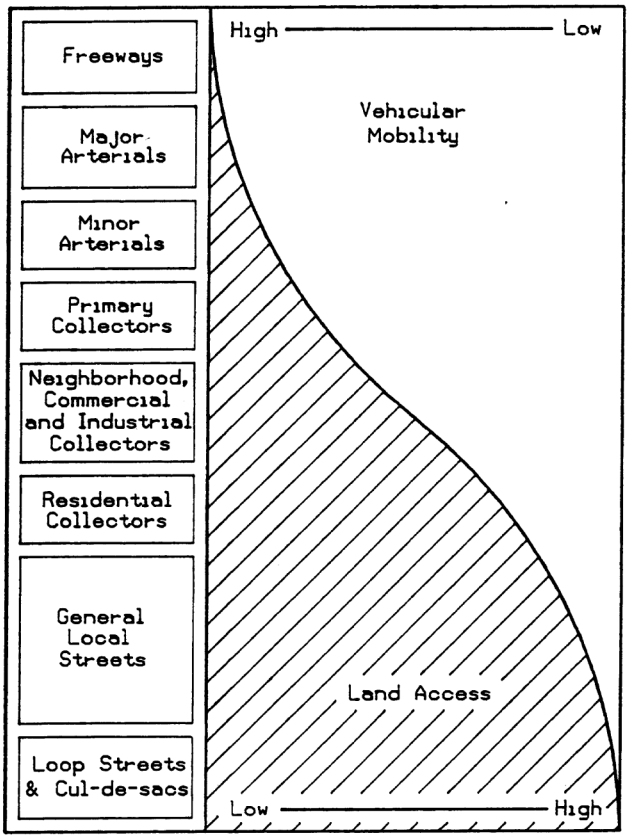

Source: Adapted from AASHTO-Geometric Design of Highways and Streets,1984.

Figure 1-3 Types of Vertical Curves, AASHTO 1984

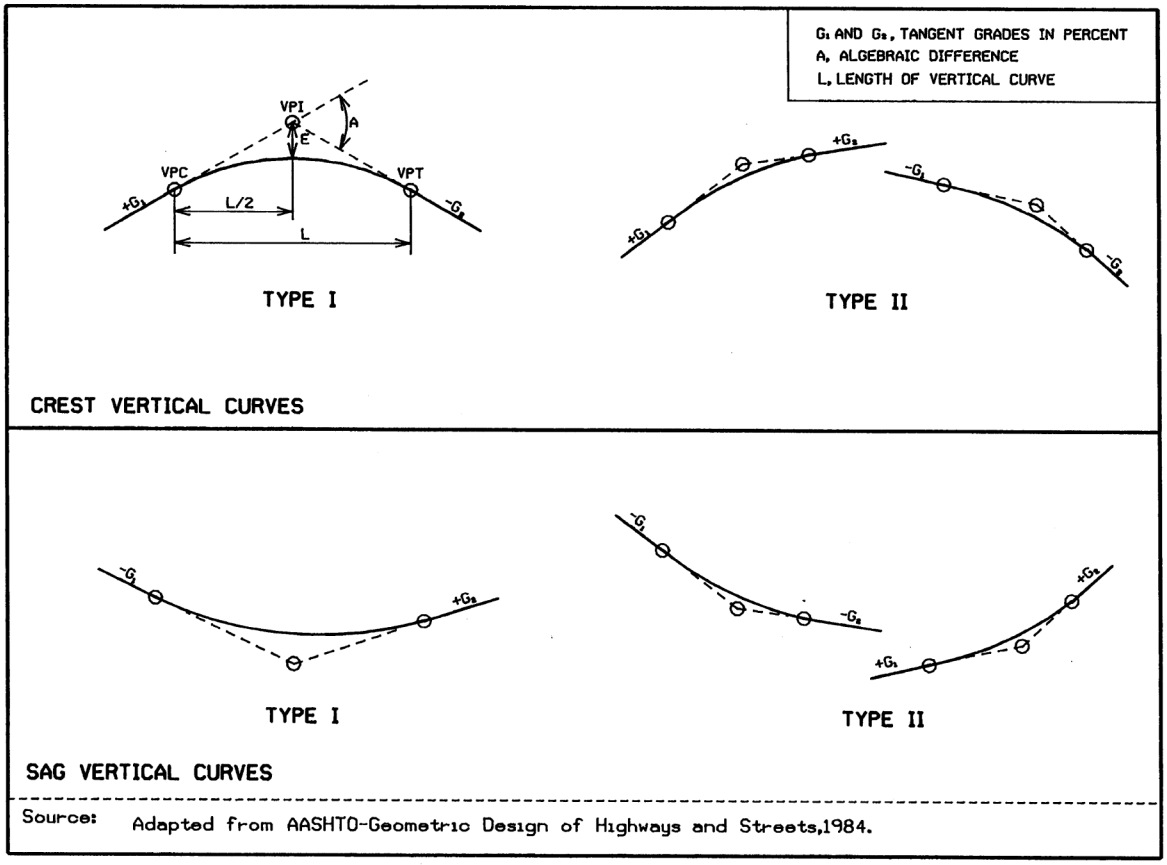

Figure 1-4 Design Controls for Crest Vertical Curves, AASHTO 1984

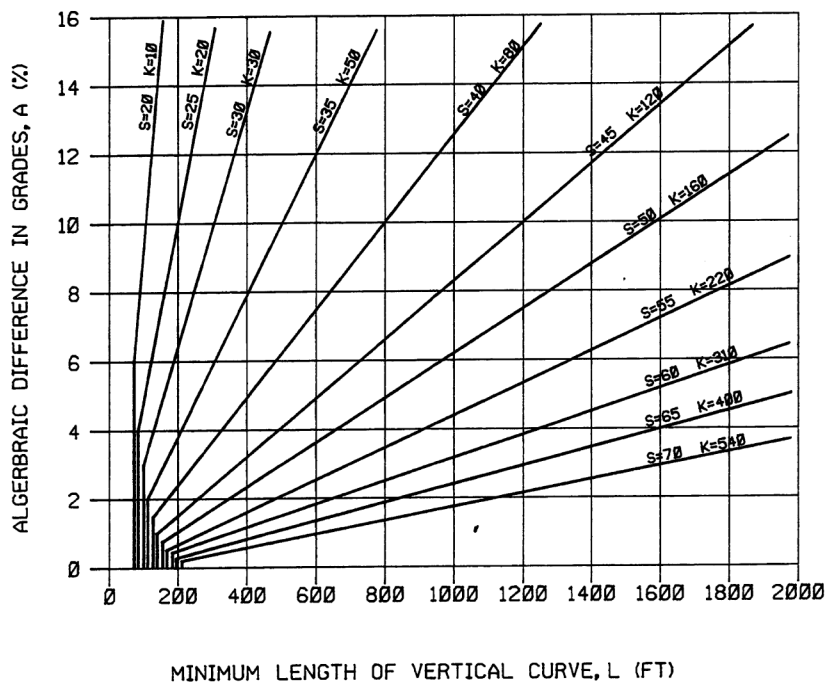

K, RATE OF CURVATURE
S, DESIGN SPEED (MPH)

Source: Adapted from AASHTO-Geometric Design of Highways and Streets,1984.

Figure 1-5 Design Controls for SAG Vertical Curves, AASHTO 1984

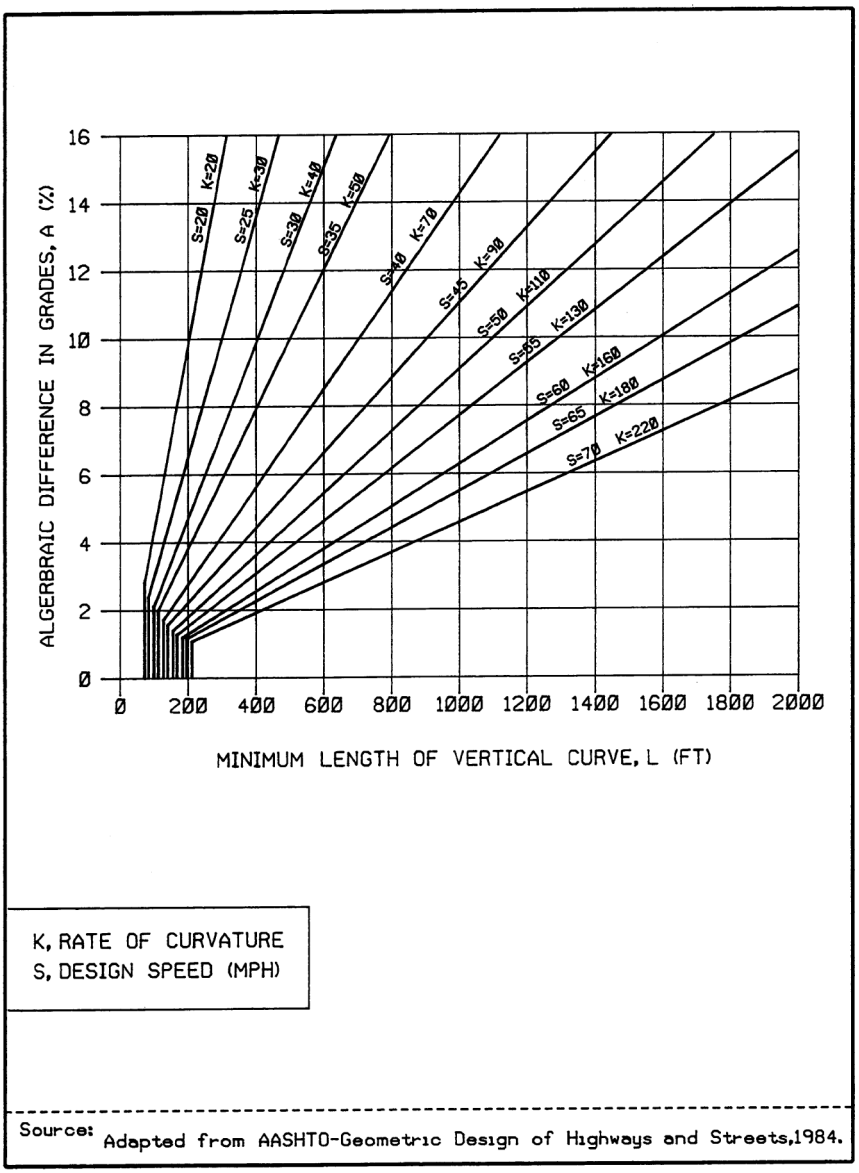

Source: Adapted from AASHTO-Geometric Design of Highways and Streets,1984.

Figure 1-7 Intersection Nose Treatment, 6 Lane Divided and 6 Lane Divided

Major Street

Median Width, 26' LOG to LOG
Reduced Median Width at Turnbay, 14' LOG to LOG
Control Radius, 75'

Minor Street

Median Width, 26' LOG to LOG
Reduced Median Width at Turnbay, 14' LOG to LOG
Control Radius, 75'

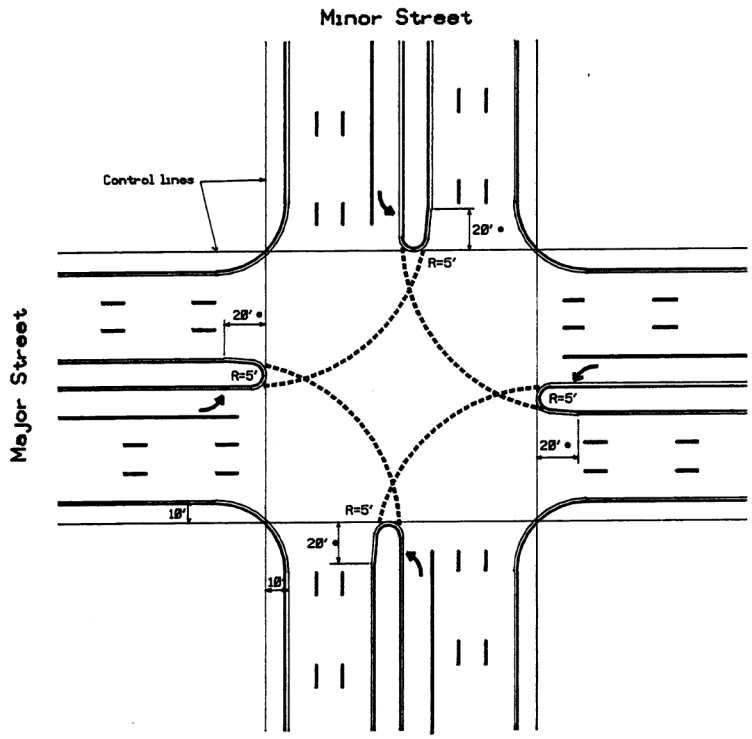

* Distance may vary on skewed intersections, provided that the 75' control radius is achieved.

Source: City of Austin Transportation and Public Services Department

Figure 1-8 Intersection Nose Treatment, 6 Lane Divided and Neighborhood Collector

Major Street

Median Width, 26' LOG to LOG
Reduced Median Width at Turnbay, 14' LOG to LOG
Control Radius, 50'

Minor Street

Median Width, N/A
Reduced Median Width at Turnbay, N/A
Control Radius, 50'

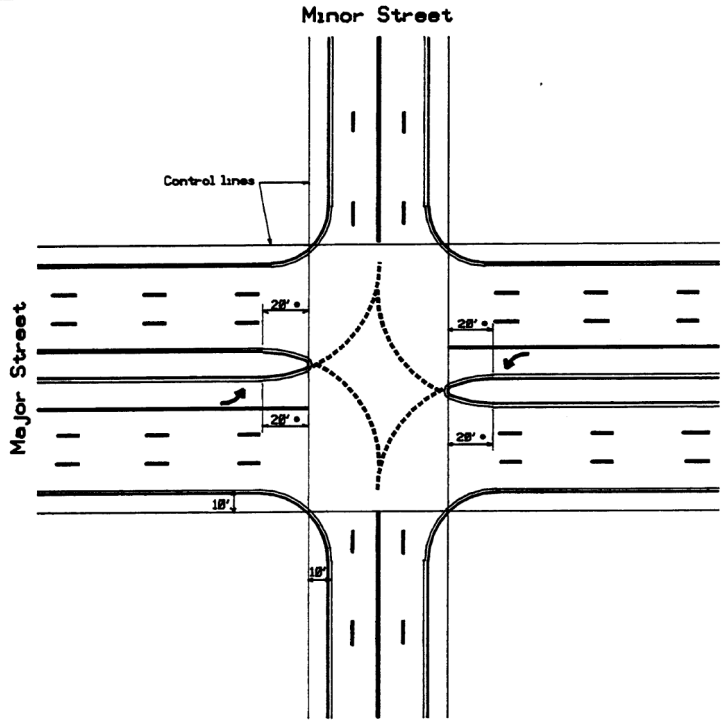

• Distance may vary on skewed intersections, provided that the 50' control radius is achieved.

Source: City of Austin Transportation and Public Services Department

Figure 1-13 Typical Median Application for Providing Left-Turn Deceleration and Storage into Driveway or Cross-Street

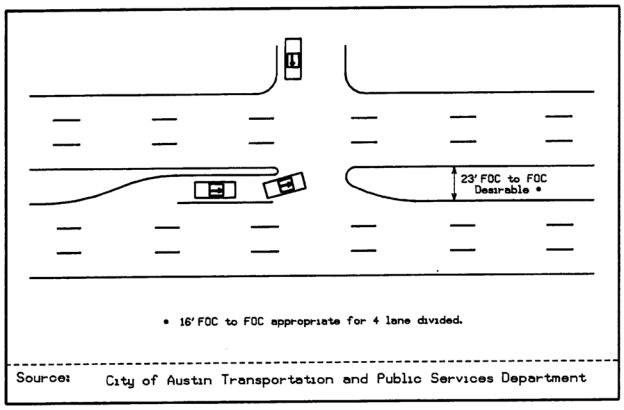

Figure 1-14 Typical Median Application for Providing Crossing Vehicle Protection from a Driveway or Cross-Street

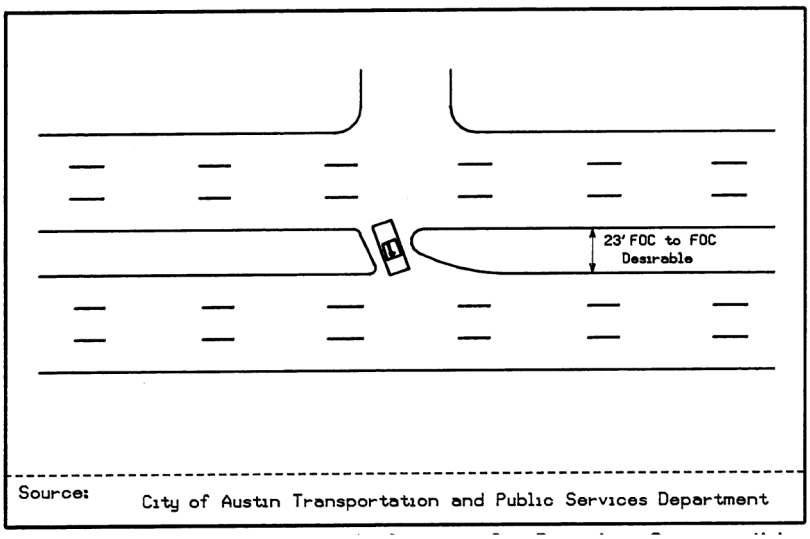

Figure 1-15 Typical Median Application, Limitation of Movement to Entering Left-Turns, One Direction

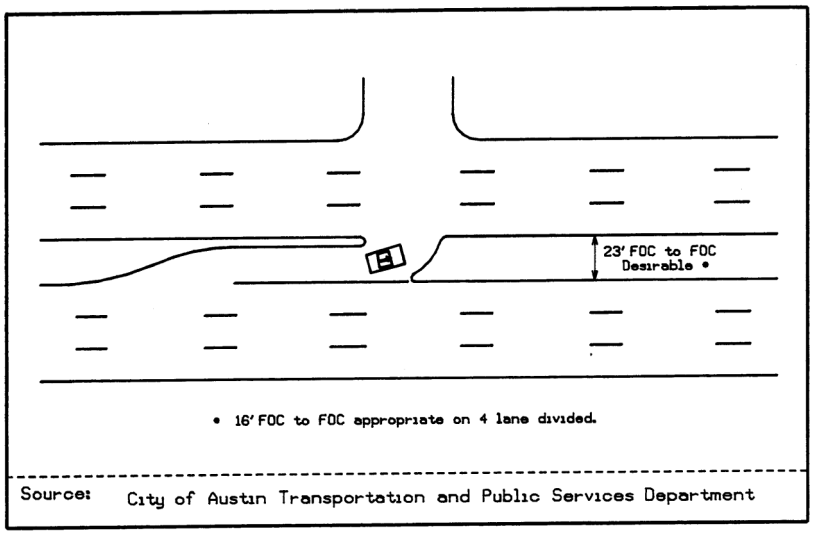

Figure 1-16 Typical Median Application, Limitation of Movement to Entering Left-Turns, Two Directions

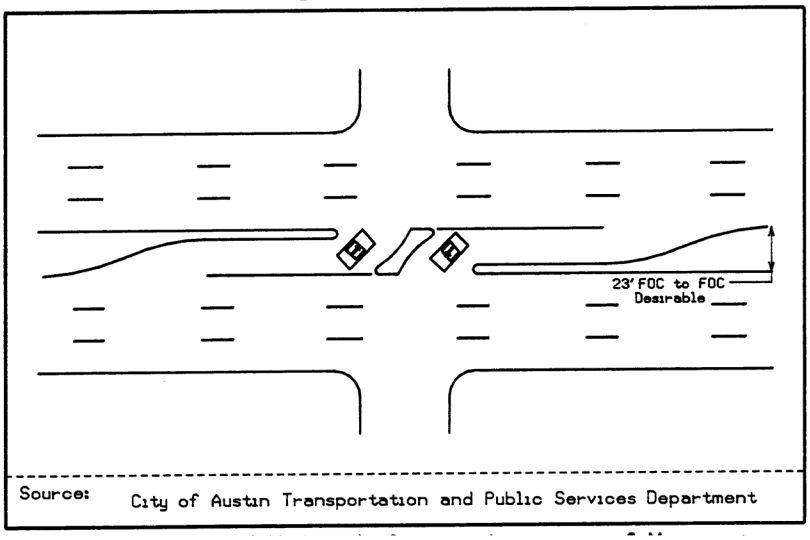

Figure 1-17 Typical Median Application, Providing "U" Turn Movements

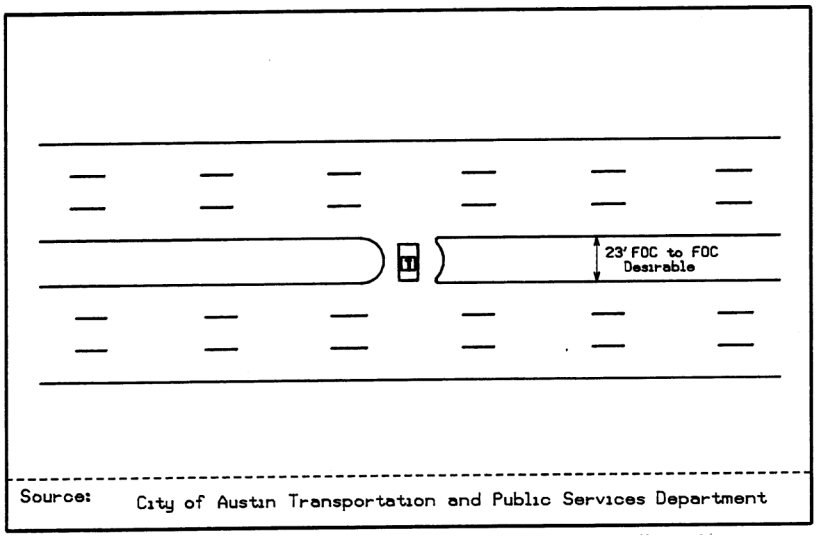

Figure 1-18 Typical Median Application, Channelized "T"

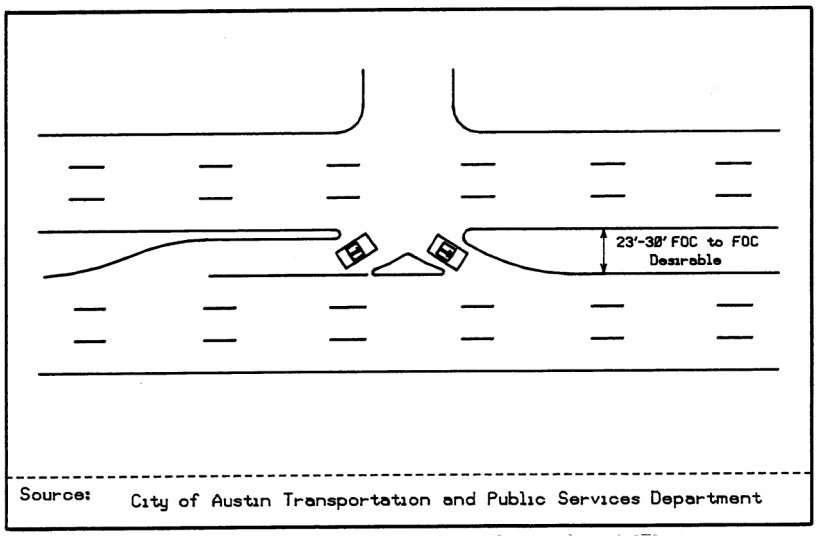

Figure 1-19 Median Breaks

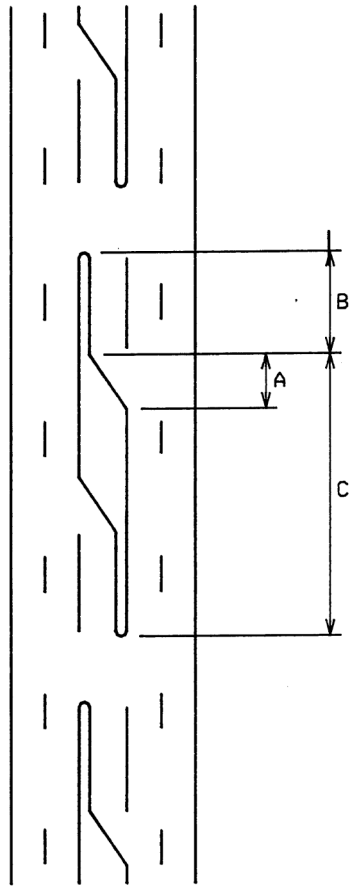

Distance A = Bay Taper from Figure 1-11
Distance B = Storage Length from Table 1-5
Distance C = Required Spacing from Table 1-4

Source: City of Austin Transportation and Public Services Department

Figure 1-20 Typical Median Opening Layout

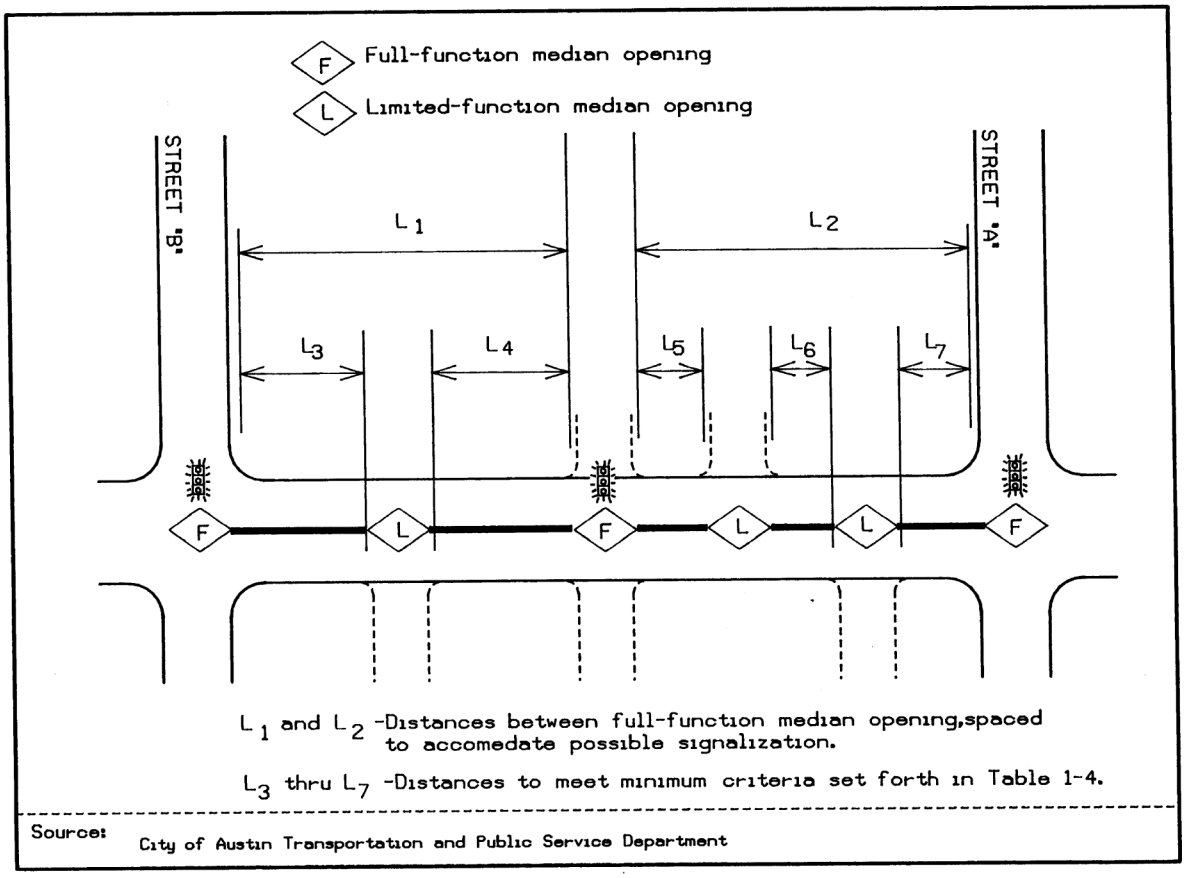

Source: City of Austin Transportation and Public Service Department

Figure 1-21 Typical Median Application, Full Function, Spacing Appropriate for Signalization

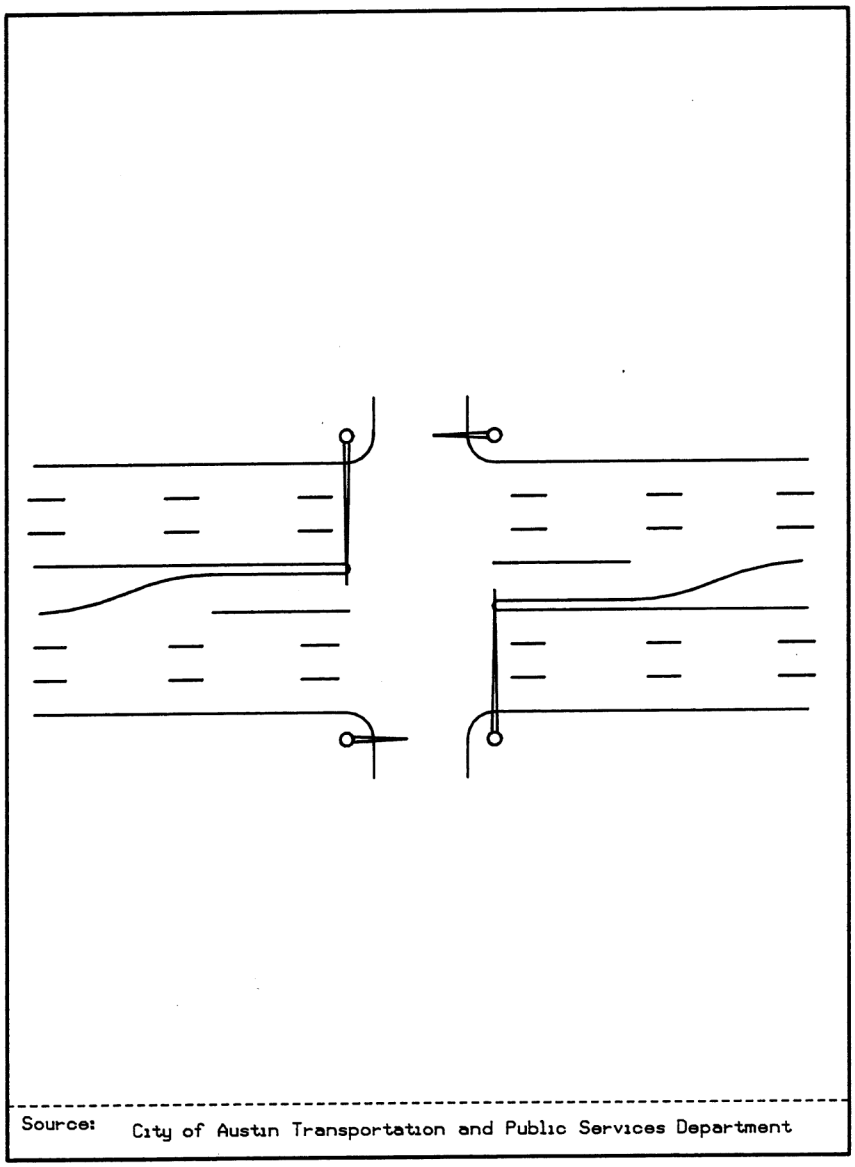

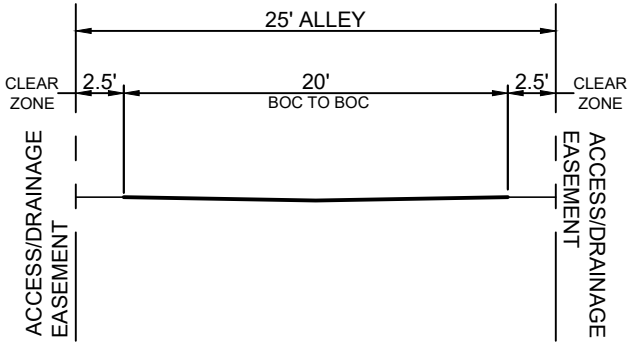

ROAD CLASSIFICATION INFORMATION	
DESIGN SPEED (MPH)	-
ADT RANGE	N/A
GENERAL LENGTH	400'
MIN. TANGENT LENGTH BETWEEN HORIZONTAL CURVES	N/A
MINIMUM CURB BASIS	-

IMPERVIOUS COVER INFORMATION (FOR WATER QUALITY/DETENTION POND SIZING)	
IMPERVIOUS COVER (PERCENT OF ROW)	80%
IMPERVIOUS COVER (SF PER 1,000 LF OF ROADWAY)	20,000 SF

CITY OF BEE CAVE

CITY OF BEE CAVE
ROAD CROSS SECTIONS

FIGURE 1-22

ROAD CLASSIFICATION:

ALLEY SECTION

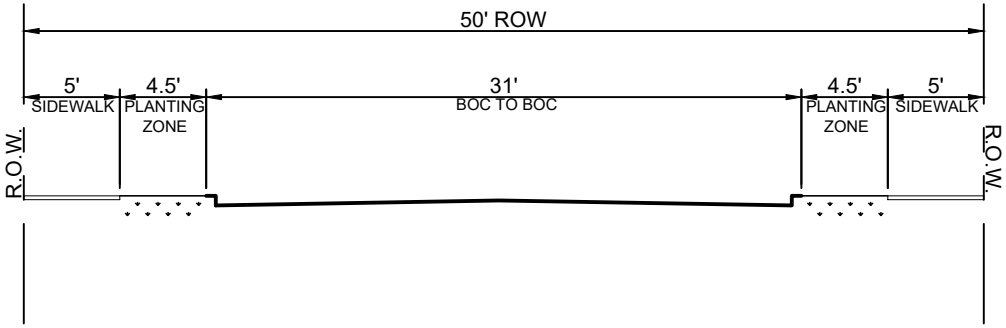

ROAD CLASSIFICATION INFORMATION	
DESIGN SPEED (MPH)	25, 30
ADT RANGE	<1,000
MIN. TANGENT LENGTH BETWEEN HORIZONTAL CURVES	50'
MINIMUM CURB BASIS	10'

IMPERVIOUS COVER INFORMATION (FOR WATER QUALITY/DETENTION POND SIZING)	
IMPERVIOUS COVER (PERCENT OF ROW)	82%
IMPERVIOUS COVER (SF PER 1,000 LF OF ROADWAY)	40,100 SF

CITY OF BEE CAVE

CITY OF BEE CAVE
ROAD CROSS SECTIONS

FIGURE 1-23

ROAD CLASSIFICATION:

LOCAL RESIDENTIAL

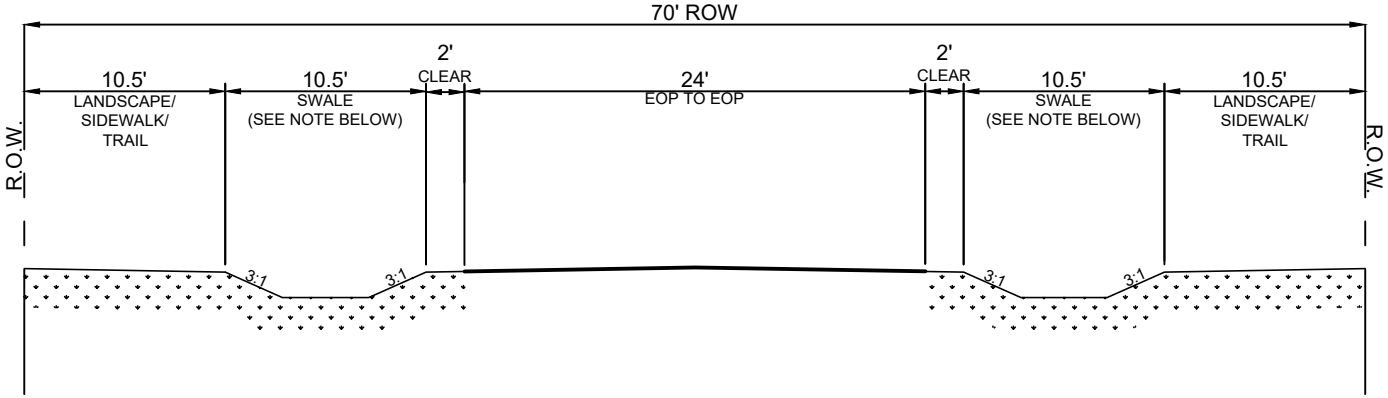

NOTE: THE CITY ENGINEER MAY APPROVE A REDUCED ROADSIDE SWALE WIDTH IF IT CAN BE DEMONSTRATED THAT THE REDUCED WIDTH WILL FULLY CONVEY DESIGN STORM EVENTS (IN ACCORDANCE WITH COA DCM)

ROAD CLASSIFICATION INFORMATION	
DESIGN SPEED (MPH)	25
ADT RANGE	<1,000
MIN. TANGENT LENGTH BETWEEN HORIZONTAL CURVES	50'
MINIMUM CURB BASIS	N/A

IMPERVIOUS COVER INFORMATION (FOR WATER QUALITY/DETENTION POND SIZING)	
IMPERVIOUS COVER (PERCENT OF ROW)	63%
IMPERVIOUS COVER (SF PER 1,000 LF OF ROADWAY)	40,400 SF

CITY OF BEE CAVE

CITY OF BEE CAVE
ROAD CROSS SECTIONS

FIGURE 1-24

ROAD CLASSIFICATION:

RURAL RESIDENTIAL

OPTION WITH PARKING

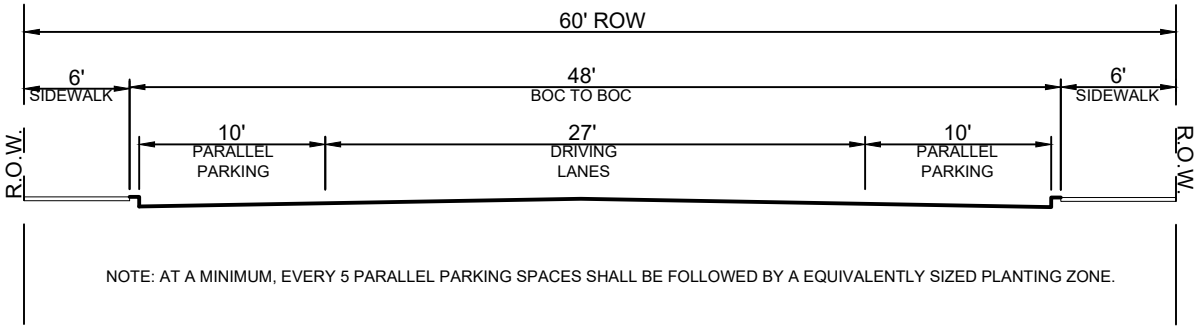

NOTE: AT A MINIMUM, EVERY 5 PARALLEL PARKING SPACES SHALL BE FOLLOWED BY A EQUIVALENTLY SIZED PLANTING ZONE.

OPTION WITHOUT PARKING

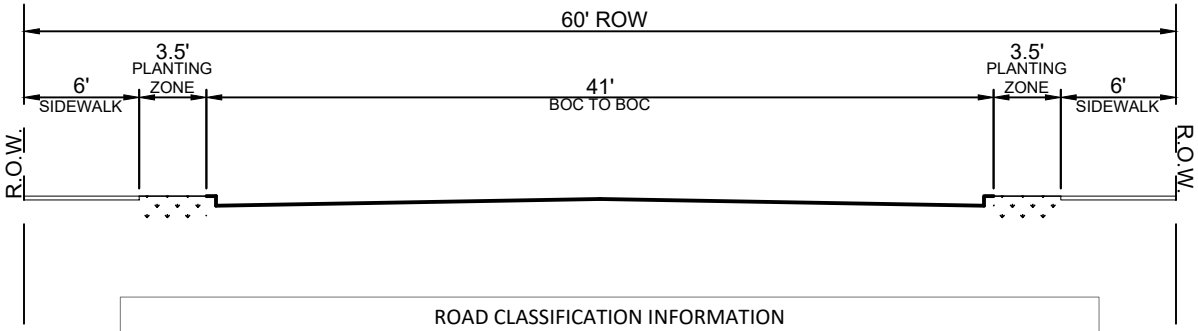

ROAD CLASSIFICATION INFORMATION	
DESIGN SPEED (MPH)	30, 35
ADT RANGE	500 - 3,000
MIN. TANGENT LENGTH BETWEEN HORIZONTAL CURVES	50'
MINIMUM CURB BASIS	10'

IMPERVIOUS COVER INFORMATION (FOR WATER QUALITY/DETENTION POND SIZING)		
IMPERVIOUS COVER (PERCENT OF ROW)	88%	FOR PARALLEL PARKING - VARIES BASED ON ROADWAY LENGTH/NUMBER OF PARALLEL SPOTS
IMPERVIOUS COVER (SF PER 1,000 LF OF ROADWAY)	53,000 SF	

CITY OF BEE CAVE

CITY OF BEE CAVE
ROAD CROSS SECTIONS

FIGURE 1-25

ROAD CLASSIFICATION:

RESIDENTIAL COLLECTOR

OPTION WITH PARKING

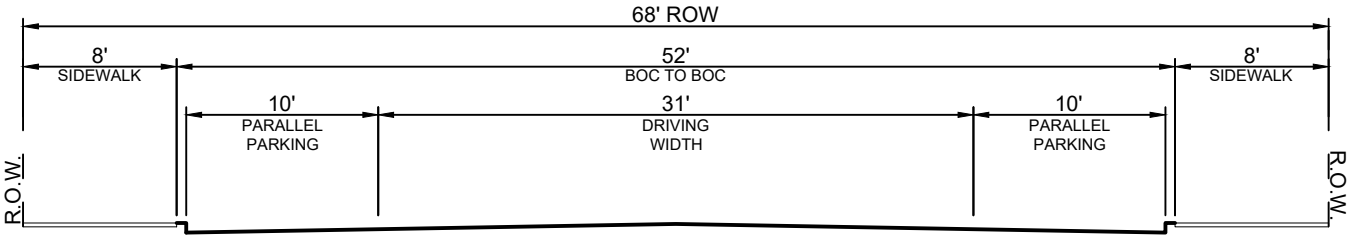

NOTE: AT A MINIMUM, EVERY 5 PARALLEL PARKING SPACES SHALL BE FOLLOWED BY AN EQUIVALENTLY SIZED PLANTING ZONE.

OPTION WITHOUT PARKING

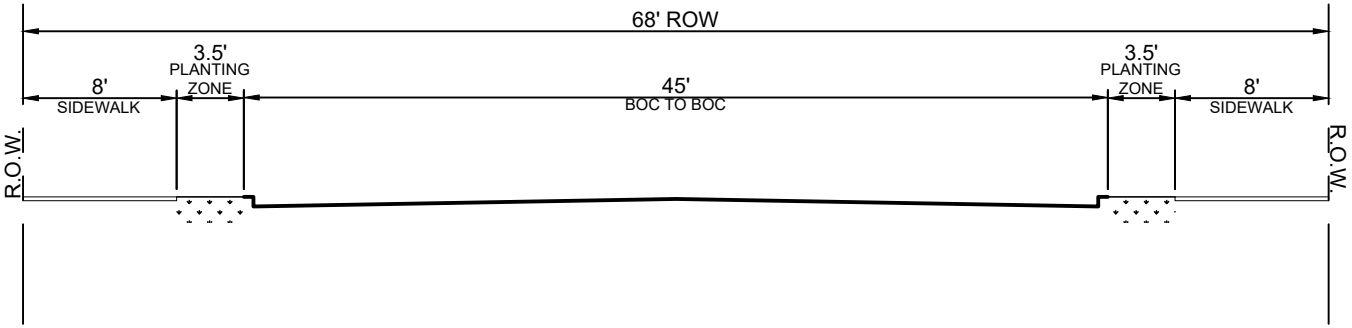

ROAD CLASSIFICATION INFORMATION	
DESIGN SPEED (MPH)	35
ADT RANGE	2,000 - 6,000
MIN. TANGENT LENGTH BETWEEN HORIZONTAL CURVES	100'
MINIMUM CURB BASIS	12'

IMPERVIOUS COVER INFORMATION (FOR WATER QUALITY/DETENTION POND SIZING)		
IMPERVIOUS COVER (PERCENT OF ROW)	90%	FOR PARALLEL PARKING - VARIES BASED ON ROADWAY LENGTH/NUMBER OF PARALLEL SPOTS
IMPERVIOUS COVER (SF PER 1,000 LF OF ROADWAY)	61,000 SF	

CITY OF BEE CAVE

CITY OF BEE CAVE
ROAD CROSS SECTIONS

FIGURE 1-26

ROAD CLASSIFICATION:

NEIGHBORHOOD COLLECTOR

OPTION WITH PARKING

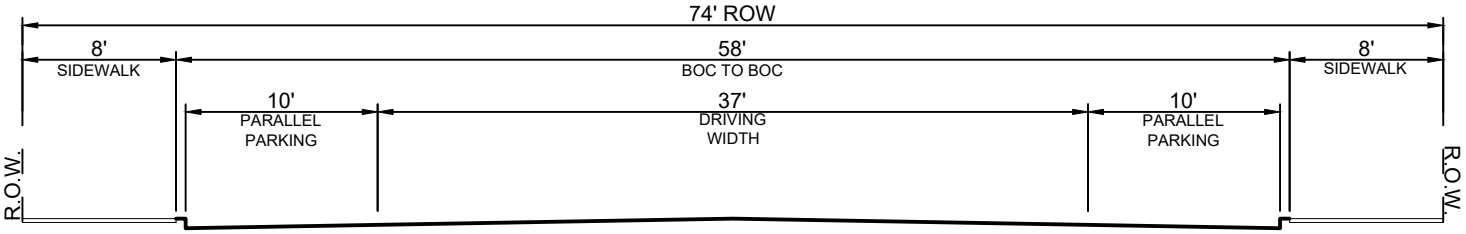

NOTE: AT A MINIMUM, EVERY 5 PARALLEL PARKING SPACES SHALL BE FOLLOWED BY A EQUIVALENTLY SIZED PLANTING ZONE.

OPTION WITHOUT PARKING

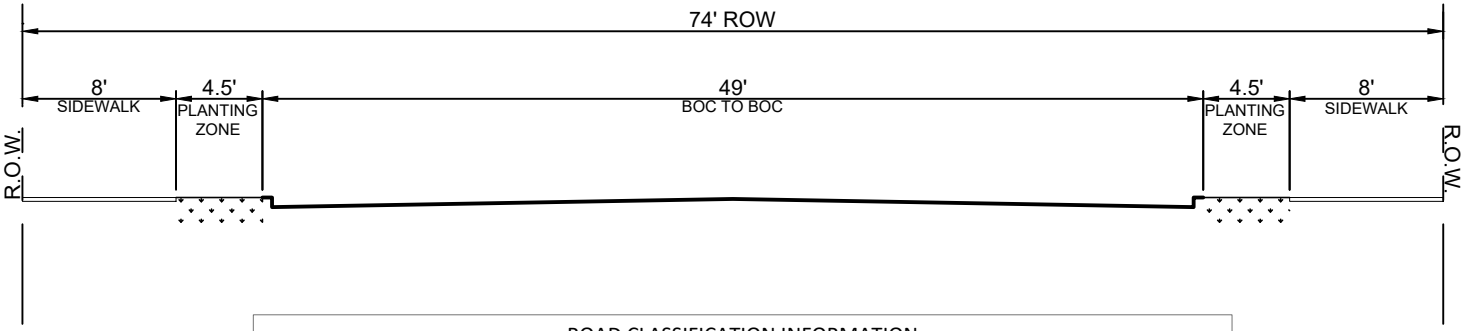

ROAD CLASSIFICATION INFORMATION	
DESIGN SPEED (MPH)	35
ADT RANGE	<10,000
MIN. TANGENT LENGTH BETWEEN HORIZONTAL CURVES	100'
MINIMUM CURB BASIS	13'

IMPERVIOUS COVER INFORMATION (FOR WATER QUALITY/DETENTION POND SIZING)		
IMPERVIOUS COVER (PERCENT OF ROW)	88%	FOR PARALLEL PARKING - VARIES BASED ON ROADWAY LENGTH/NUMBER OF PARALLEL SPOTS
IMPERVIOUS COVER (SF PER 1,000 LF OF ROADWAY)	65,000 SF	

CITY OF BEE CAVE

CITY OF BEE CAVE
ROAD CROSS SECTIONS

FIGURE 1-27

ROAD CLASSIFICATION:

PRIMARY COLLECTOR
(UNDIVIDED)

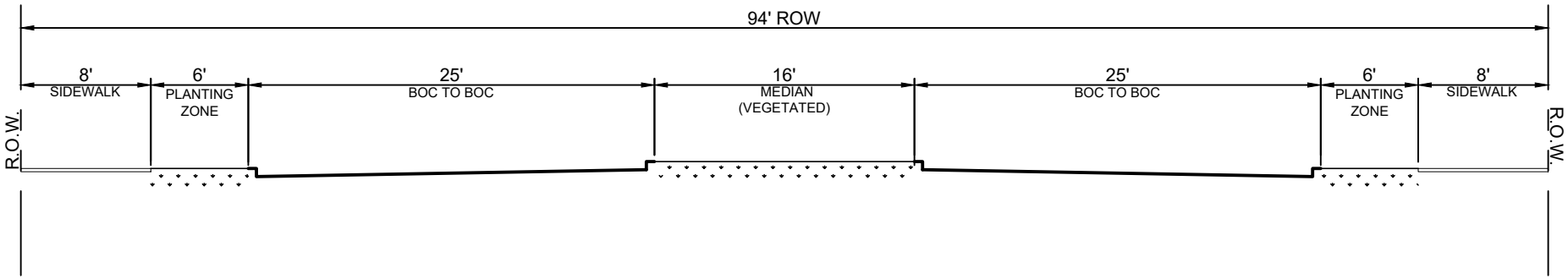

ROAD CLASSIFICATION INFORMATION	
DESIGN SPEED (MPH)	35
ADT RANGE	<10,000
MIN. TANGENT LENGTH BETWEEN HORIZONTAL CURVES	100'
MINIMUM CURB BASIS	14.5'

IMPERVIOUS COVER INFORMATION (FOR WATER QUALITY/DETENTION POND SIZING)	
IMPERVIOUS COVER (PERCENT OF ROW)	70%
IMPERVIOUS COVER (SF PER 1,000 LF OF ROADWAY)	66,000 SF

CITY OF BEE CAVE

CITY OF BEE CAVE
ROAD CROSS SECTIONS

FIGURE 1-28

ROAD CLASSIFICATION:

PRIMARY COLLECTOR
(DIVIDED)

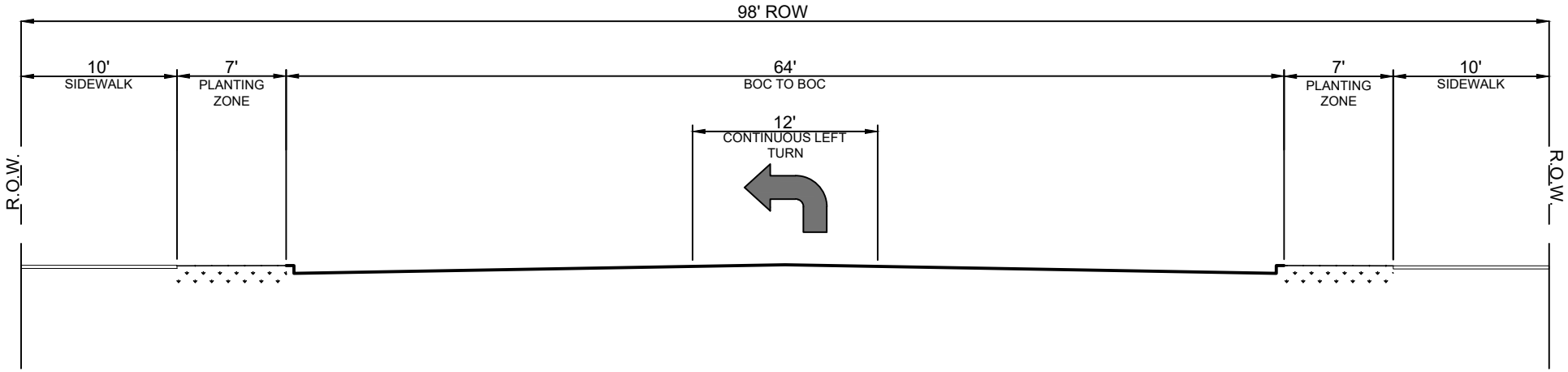

ROAD CLASSIFICATION INFORMATION	
DESIGN SPEED (MPH)	45
ADT RANGE	5,000 - 15,000
MIN. TANGENT LENGTH BETWEEN HORIZONTAL CURVES	150'
MINIMUM CURB BASIS	17.5'

IMPERVIOUS COVER INFORMATION (FOR WATER QUALITY/DETENTION POND SIZING)	
IMPERVIOUS COVER (PERCENT OF ROW)	86%
IMPERVIOUS COVER (SF PER 1,000 LF OF ROADWAY)	84,000 SF

CITY OF BEE CAVE

CITY OF BEE CAVE
ROAD CROSS SECTIONS

FIGURE 1-29

ROAD CLASSIFICATION:

MINOR ARTERIAL WITH CONT. LEFT TURN LANE

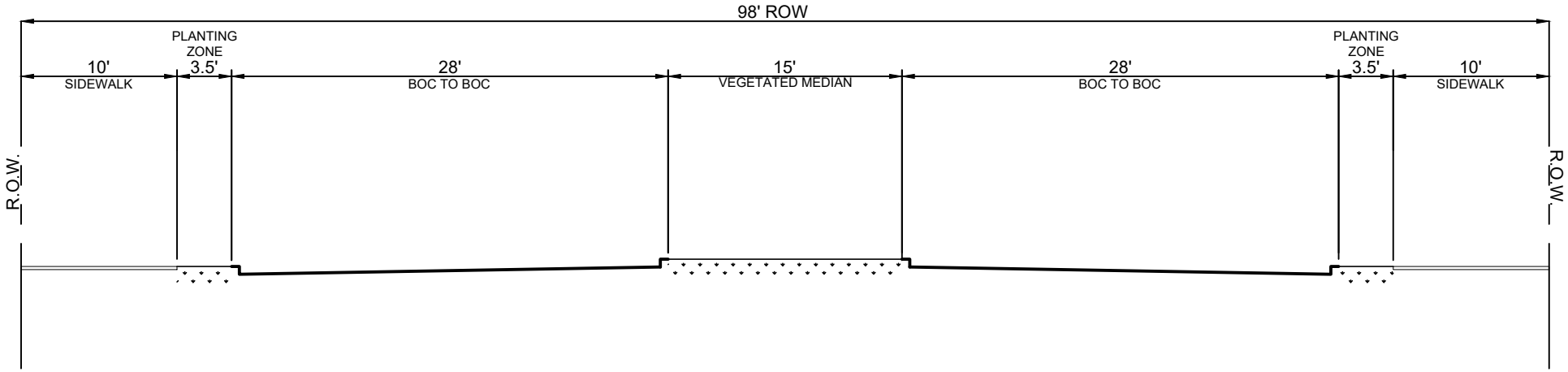

ROAD CLASSIFICATION INFORMATION	
DESIGN SPEED (MPH)	45
ADT RANGE	9,000 - 20,000
MIN. TANGENT LENGTH BETWEEN HORIZONTAL CURVES	150'
MINIMUM CURB BASIS	14'

CITY OF BEE CAVE

CITY OF BEE CAVE
ROAD CROSS SECTIONS

FIGURE 1-30

ROAD CLASSIFICATION:

MINOR ARTERIAL (4 LANE DIVIDED)

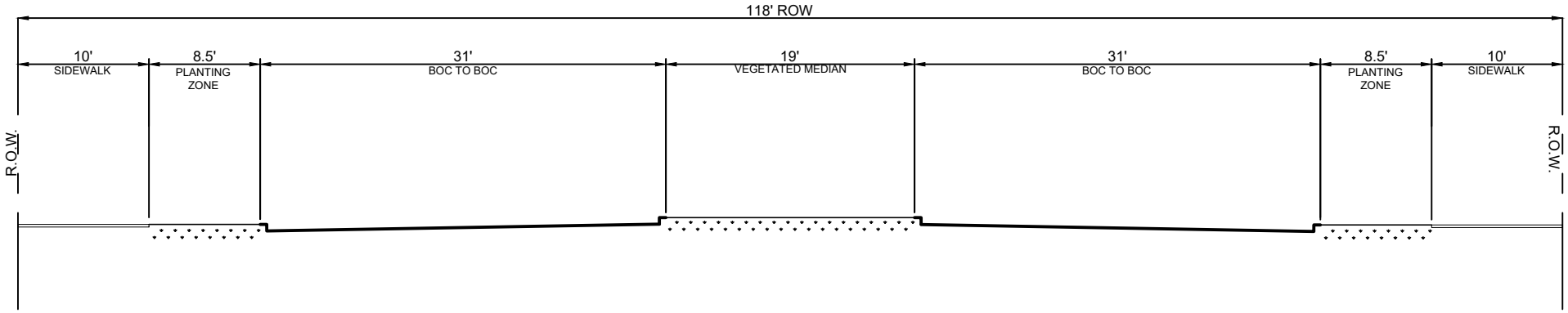

ROAD CLASSIFICATION INFORMATION	
DESIGN SPEED (MPH)	45
ADT RANGE	9,000 - 35,500
MIN. TANGENT LENGTH BETWEEN HORIZONTAL CURVES	150'
MINIMUM CURB BASIS	19'

CITY OF BEE CAVE

CITY OF BEE CAVE
ROAD CROSS SECTIONS

FIGURE 1-31

ROAD CLASSIFICATION:

MAJOR ARTERIAL (4 LANE DIVIDED)

Figure 1-40 Design Criteria For Local Cul-De-Sac

Typical ADT Range,	300		1000	
Street Throat Width,	30'		36'	
Minimum Curb Basis,	10'		10'	
General Throat Length,	400'	700'	700'	1200' *
Design Speed, mph	20	25	25	30
Special Conditions,			May be utilized **ONLY IF** 2nd outlet is not available.	

* Turnaround bubbles or cross-street intersections are required.
700' desirable/800' absolute maximum length of street between turnaround bubbles.

28, 2022

PLAN VIEW

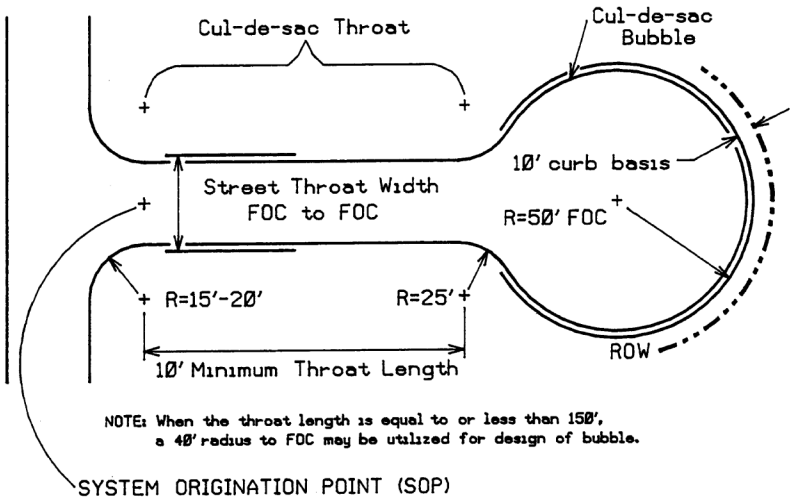

NOTE: When the throat length is equal to or less than 150', a 40' radius to FOC may be utilized for design of bubble.

Source: City of Austin Transportation and Public Services Department

12.2 SECTION 4

Figure 4-1 Curb Ramp

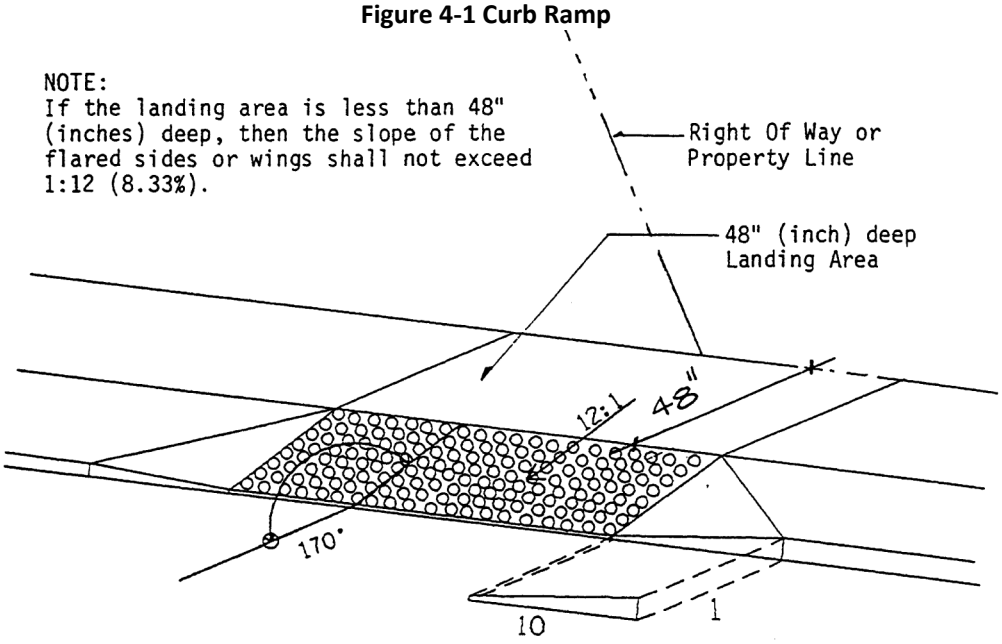

Figure 4-2 Curb Ramp Cross Section

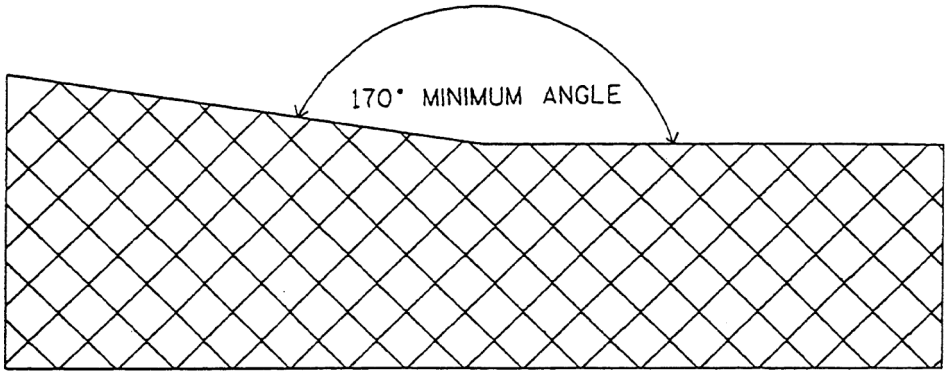

Figure 4-3A Detail Detectable Warning On Walk Surface

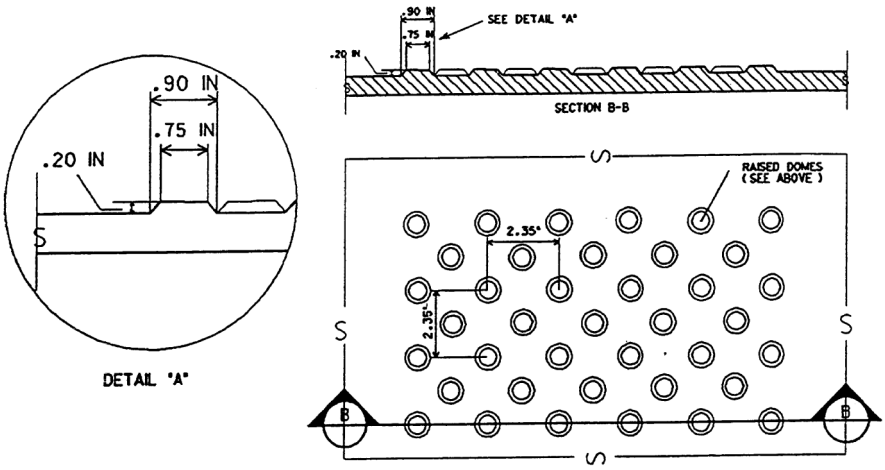

Figure 4-3B Detectable Warning On Walk Surface

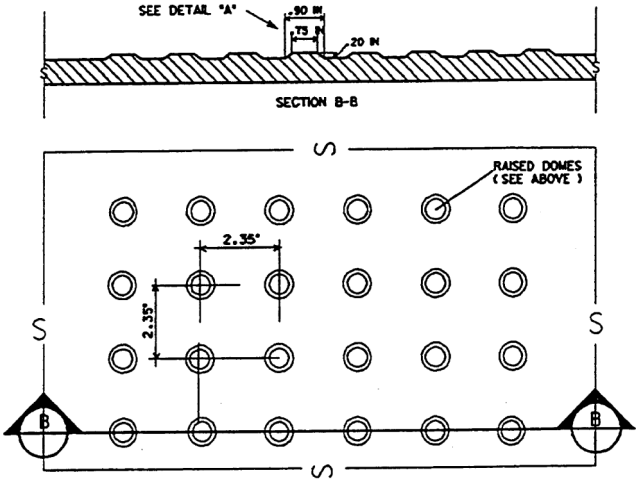

Figure 4-5 Returned Curb

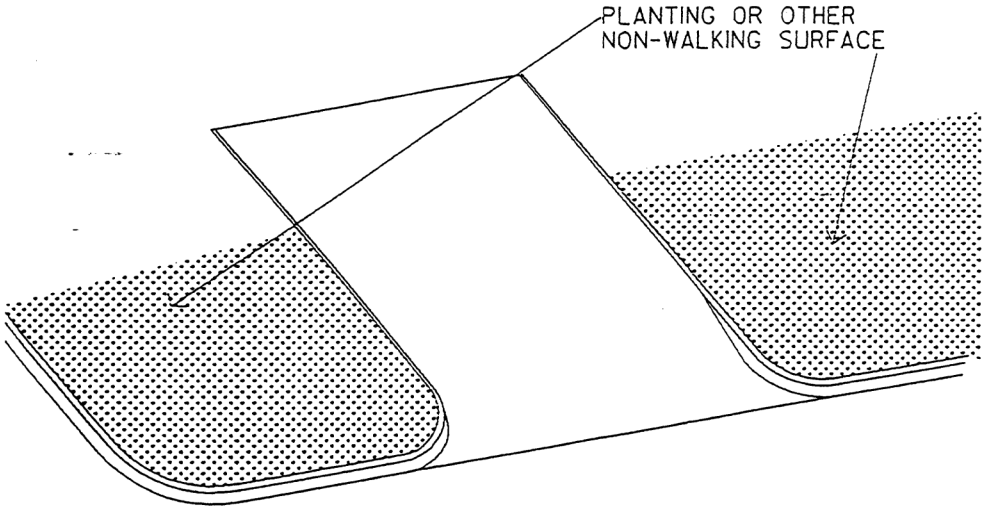

12.3 SECTION 5

Figure 5-1 Variance Grant for Temporary Type III Permit

THE STATE OF TEXAS |

| KNOW ALL MEN BY THESE PRESENTS:

COUNTY OF TRAVIS|

WHEREAS the abutting street, in the City of Austin, Texas being locally known as _____; and, _____, is not to permanent line and grade and curb and gutter are not in place, request is hereby made that the Director of the Department of Public Works and Transportation grant a variance permitting the construction of a _____ under a Temporary Type III Permit.

It is hereby agreed that said construction, pursuant to this grant, shall be reconstructed to a permanent Type I or Type II driveway approach under a new permit within sixty (60) days after notification of the completion of construction of the abutting street to permanent line and grade.

It is further agreed that I do hereby bind myself, my heirs, executors, administrators and assigns to reconstruct or remove said construction at my, or their expense, upon request of the City of Austin and will not require nor request the City of Austin to assume any portion of the expense of reconstruction or removal of said work.

WITNESS my hand this _____ day of _____

_____

THE STATE OF TEXAS |

COUNTY OF TRAVIS |

BEFORE ME, the undersigned authority, on this day personally appeared _____, known to me to be the person whose name is subscribed to the foregoing instrument, and acknowledges to me that ____he executed the same for the purpose and consideration herein expressed.

GIVEN UNDER MY HAND AND SEAL OF OFFICE, this ____ day of _____ 19_____.

_____
Notary Public
In and For Travis County, Texas

Figure 5-3 Volume Warrants For Right-Turn Deceleration Lanes

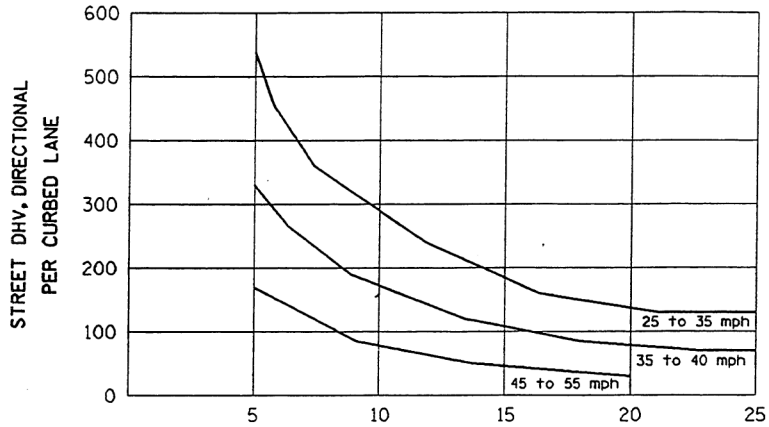

- DHV OR AVERAGE PEAK HOUR VOLUME OF VEHICLES TURNING RIGHT INTO ACCESS

- DESIGN HOUR VOLUME: Hourly traffic volumes used for street design and capacity analysis; usually one or more peek hours during a 24 hour period.

Source: Based on City of Lakewood Transportation Engineering Design Standards, 1985

Figure 5-4 Driveway Profile

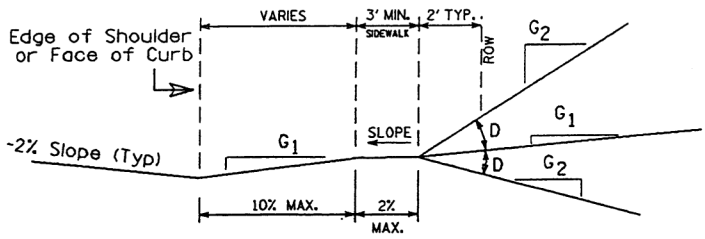

DRIVEWAY VOLUME (ADT)	D = GRADE CHANGE STANDARD	MAXIMUM
>1500	0%	3%
500-1500	3%	6%
<500	6%	15%

NOTE: THE FIRE DEPARTMENT SHOULD BE CONSULTED WHEN A GRADE CHANGE OF GREATER THAN 6% IS PROPOSED.

Source: Based on ITE, Guidelines for Urban Major Street Design, 1983

Figure 5-6 Design Criteria for Limited Movement Driveways

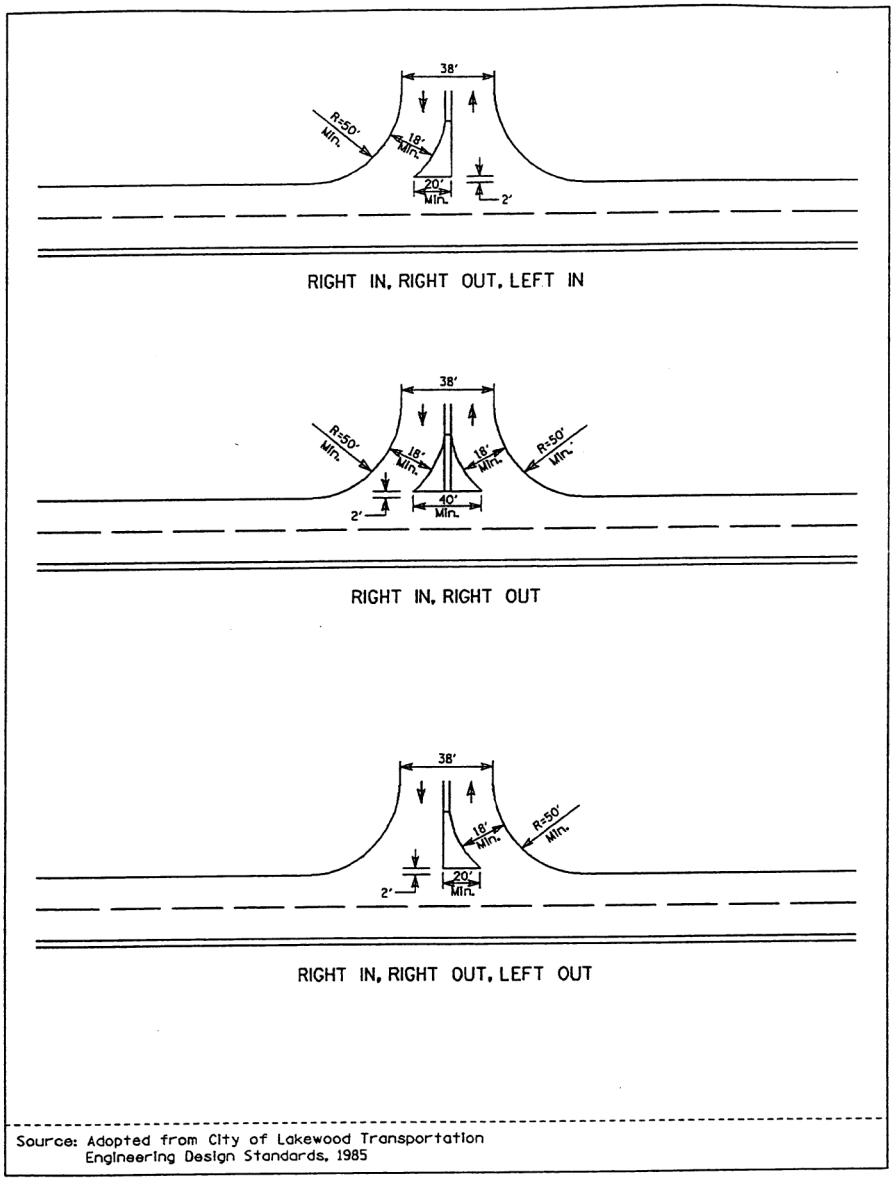

Source: Adopted from City of Lakewood Transportation Engineering Design Standards, 1985

12.4 SECTION 6

Figure 6-1 Roadway With Barrier Curb

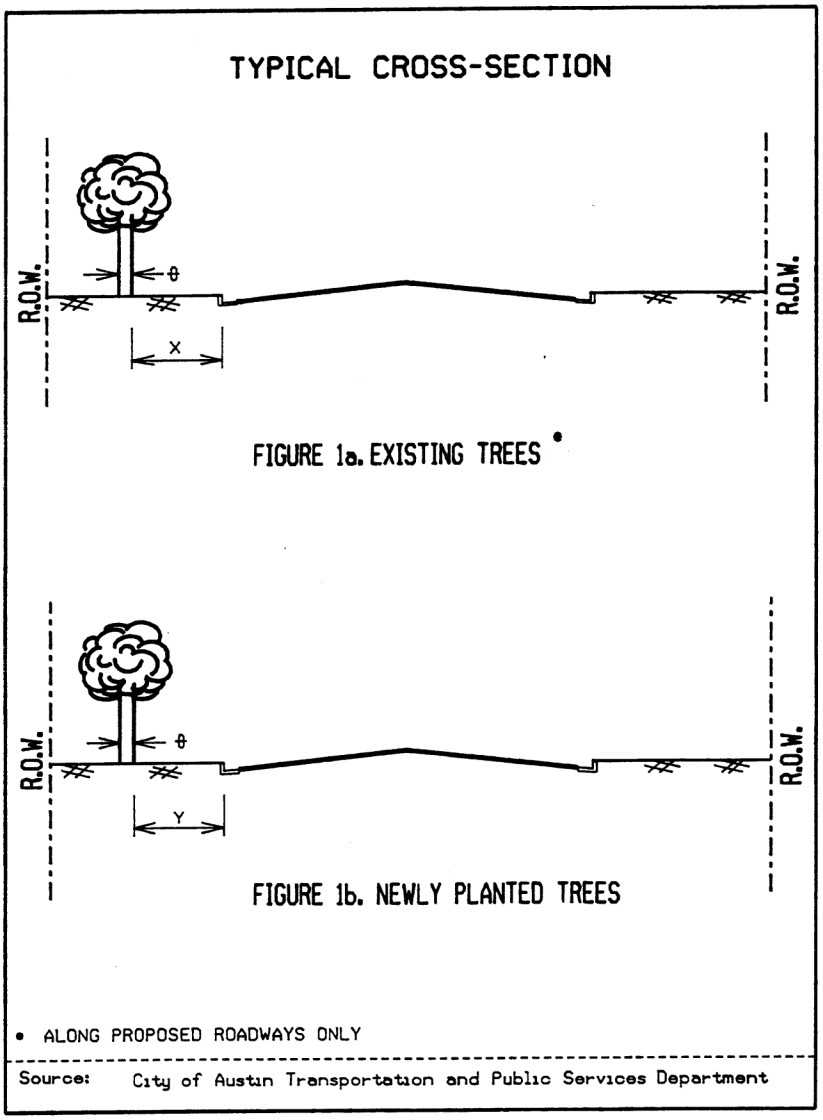

Figure 6-2 Roadway With Shoulder

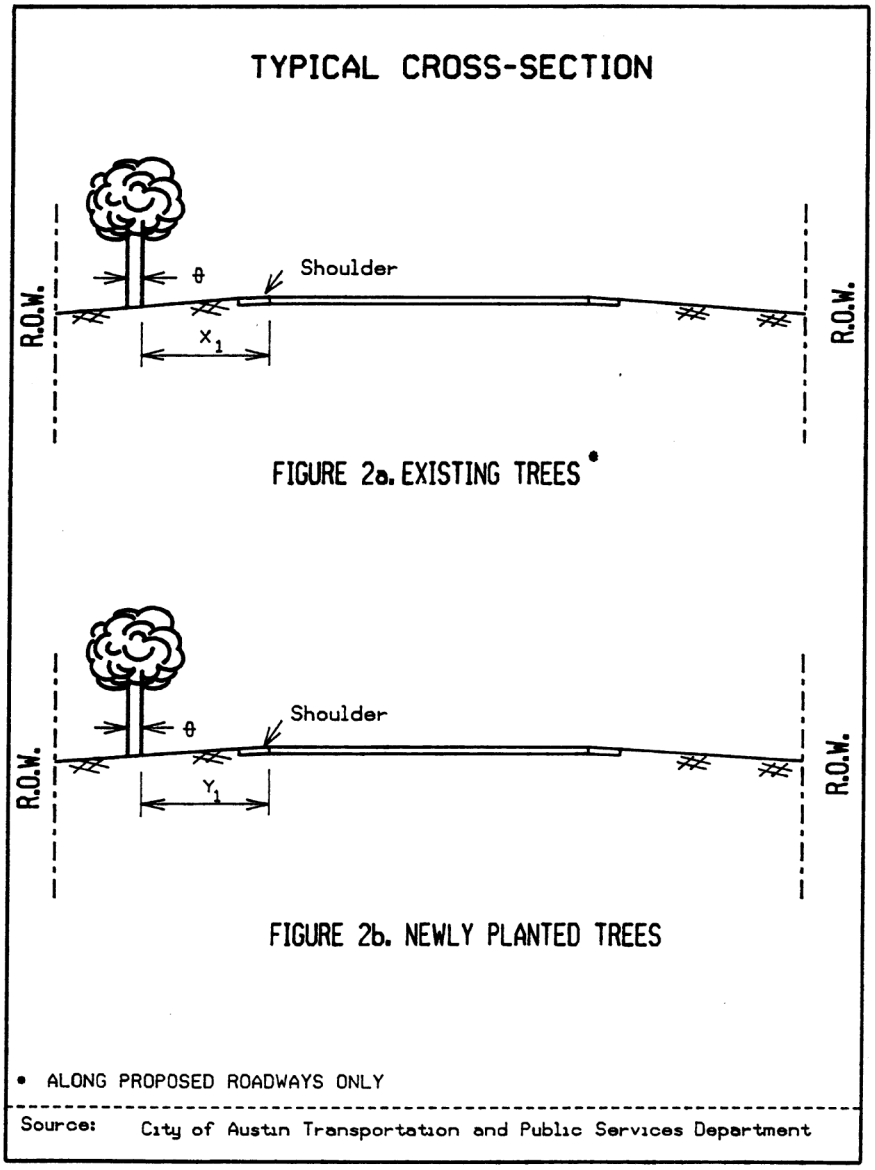

Figure 6-3 Roadway with Side Slopes

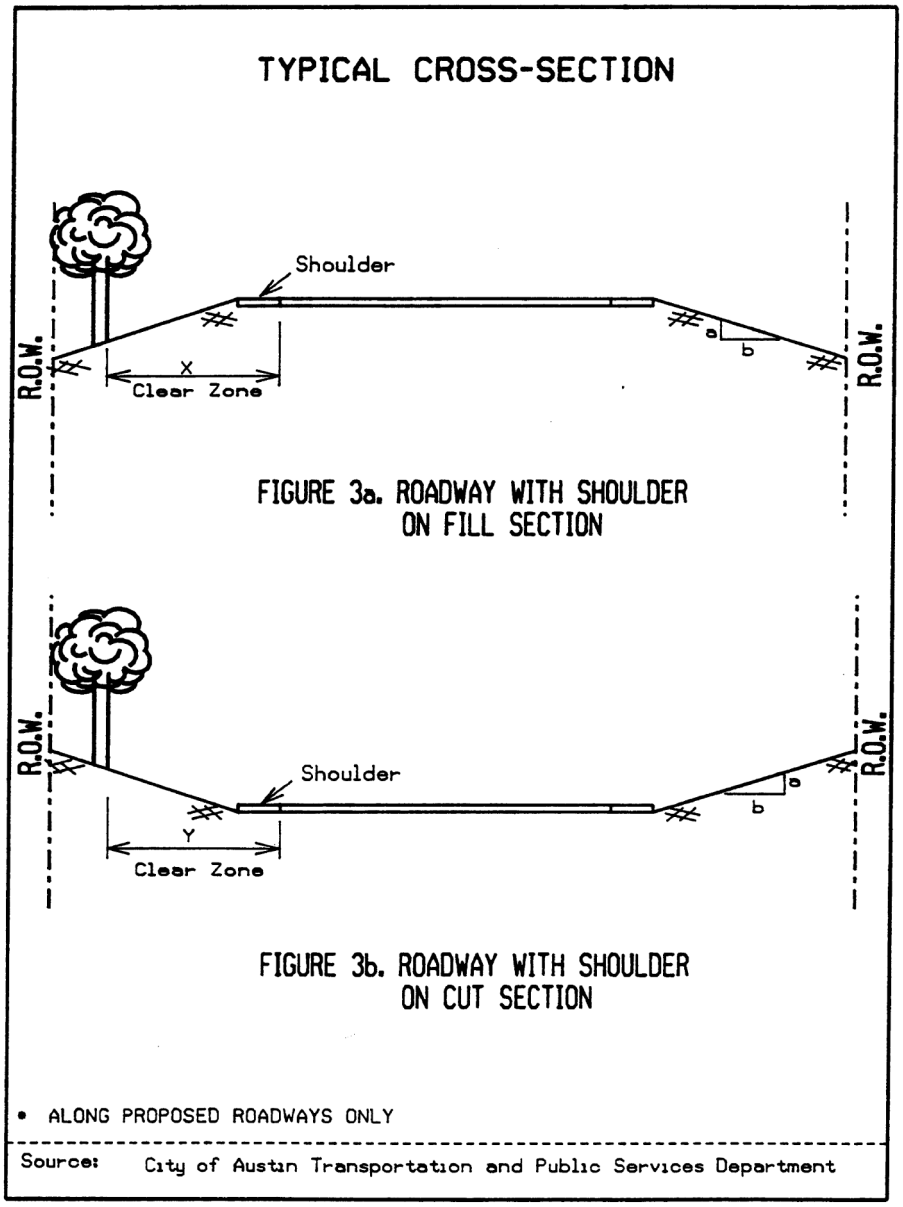

Figure 6-4 Clear Zone Adjustment on Curve Section of Roadway

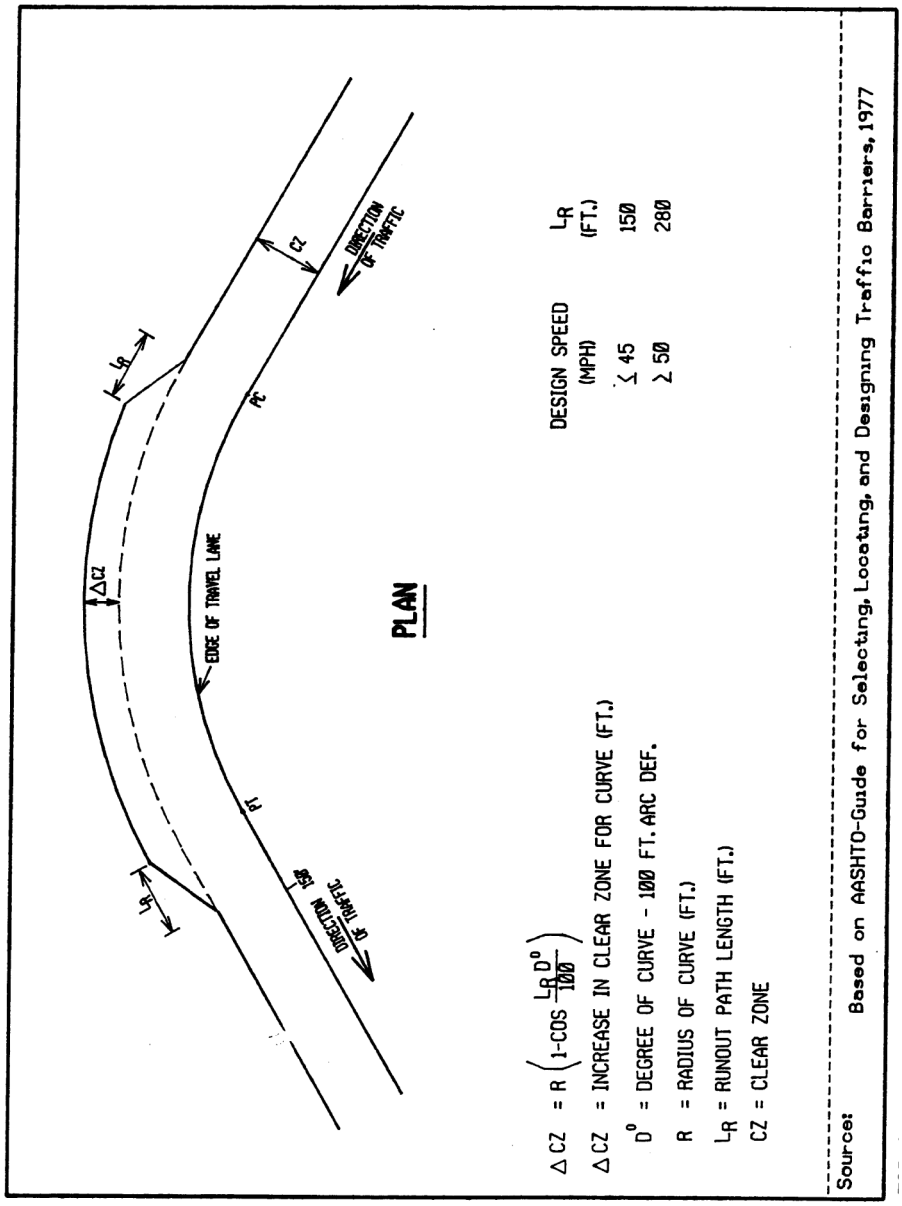

Figure 6-5 Typical Existing and Newly Planted Trees in Median

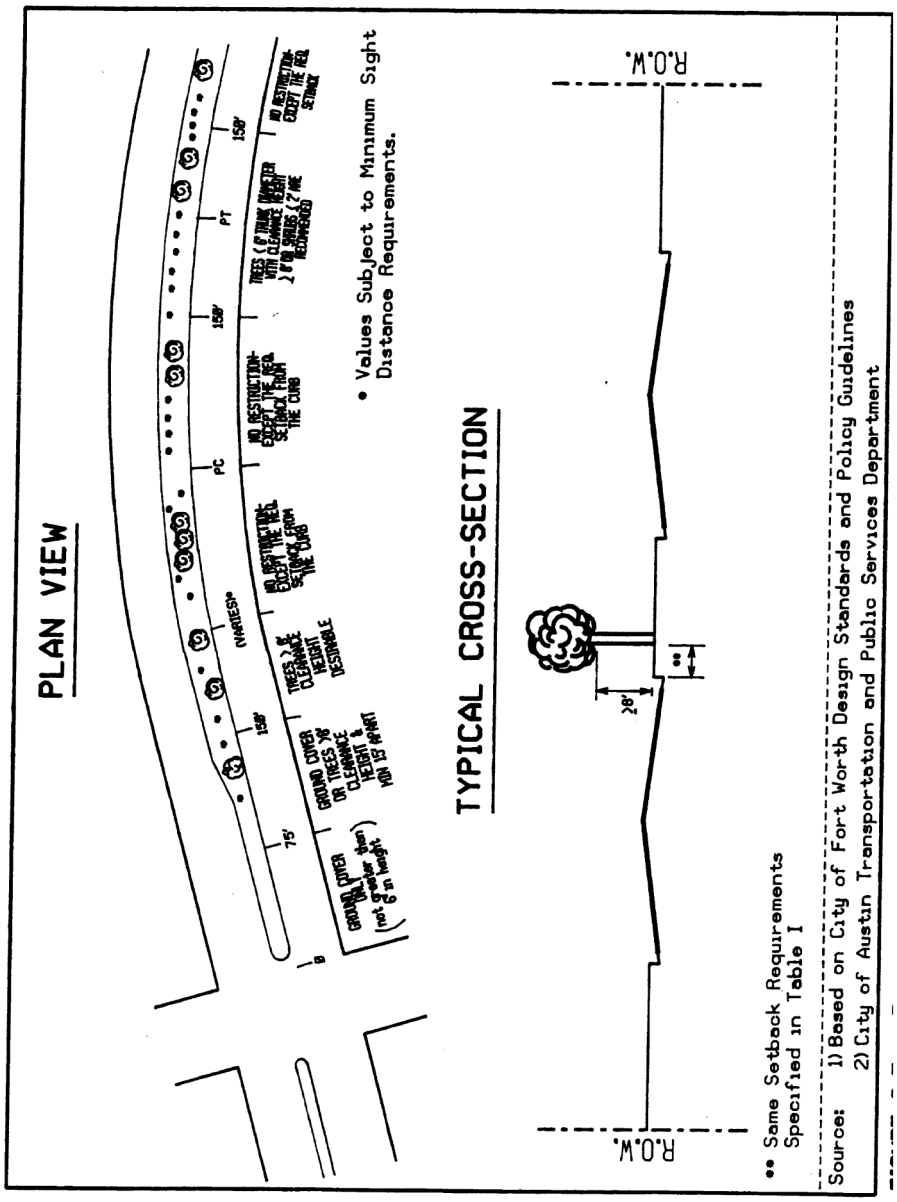

Figure 6-6 Landscaping Requirements within the Sight Triangle at Intersection

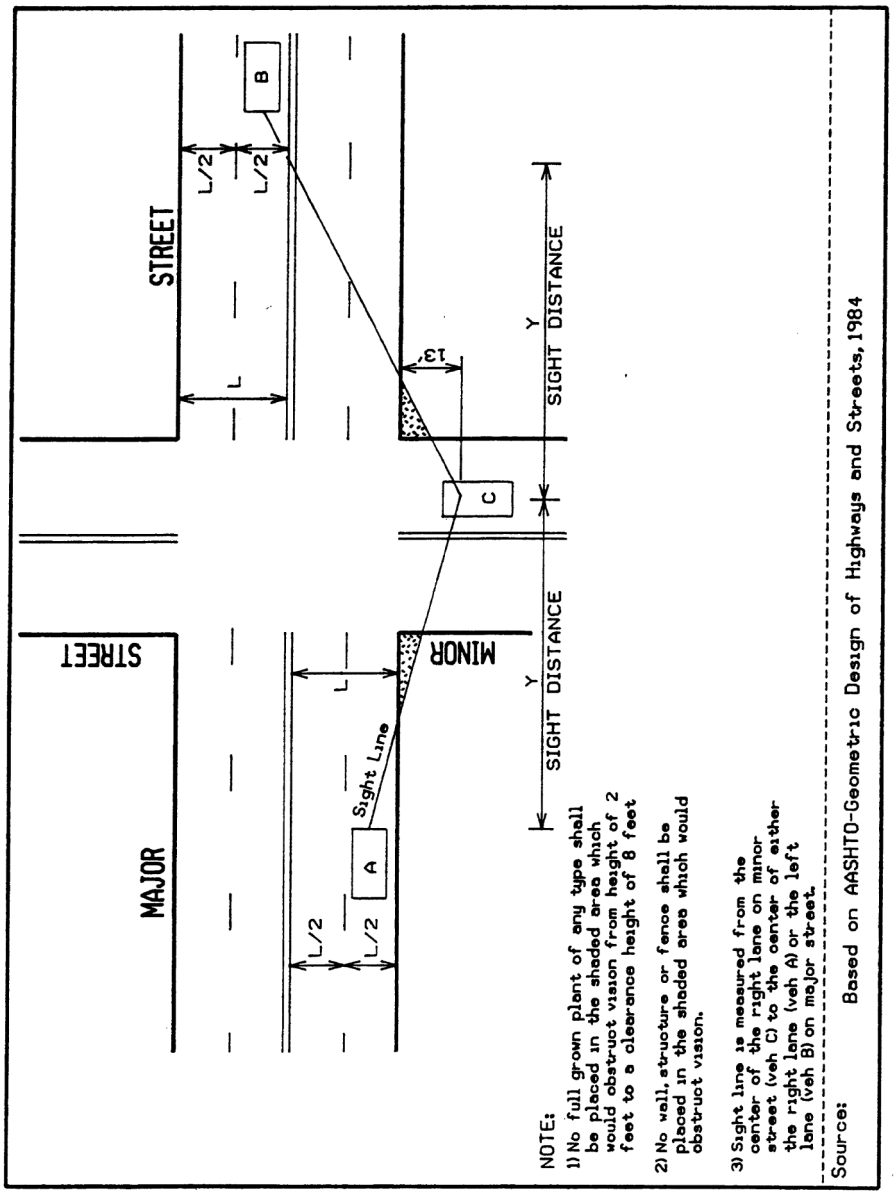

12.5 SECTION 7

Figure 7-1 Off-Road Bikeways, Bicycle-Pedestrian Path

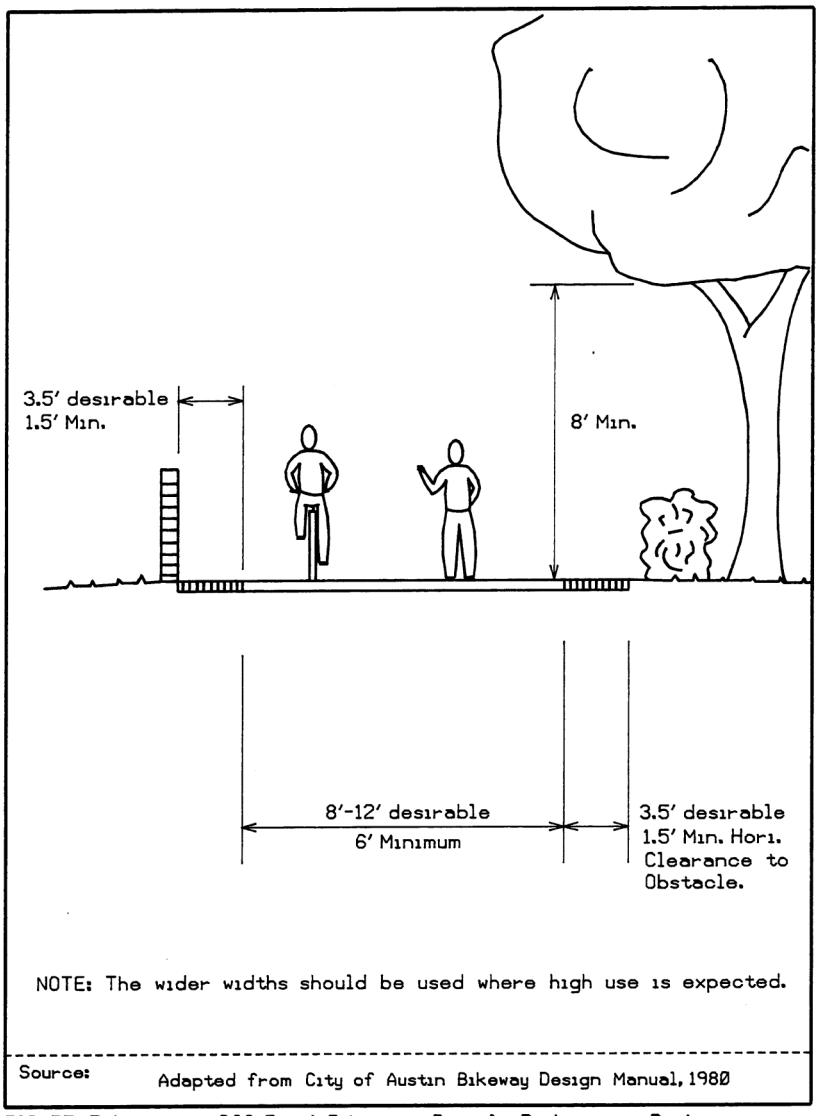

Figure 7-2 Bicycle Lane

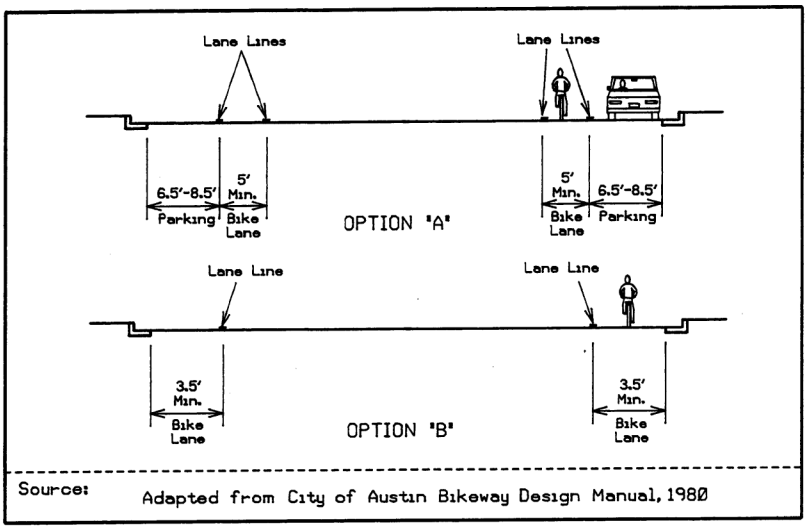

Figure 7-3 Bicycle Compatible Street

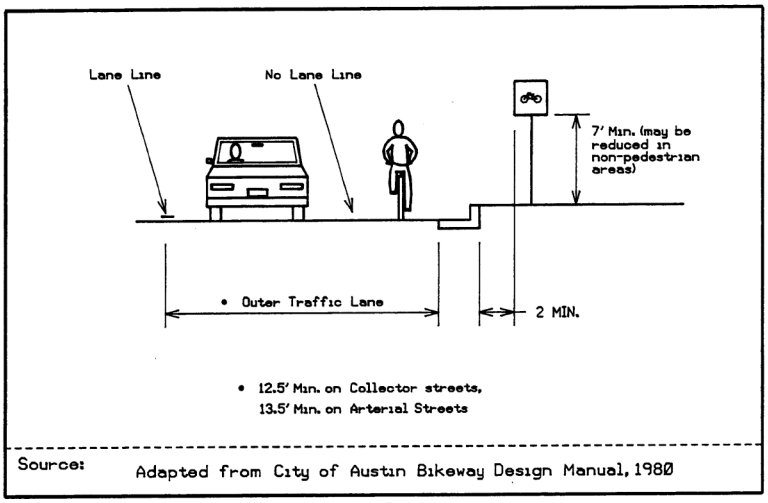

Figure 7-5 Curve Widening — Bikeways

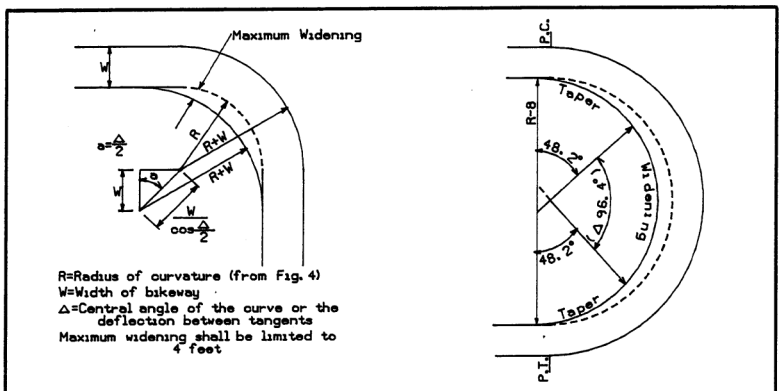

When widening reaches 4ft. (Δ 96.4°), that width shall be carried on a radius of R-4 through the central portion of the curve (Δ-96.4°) as shown on the right.

Source: Adapted from City of Austin Bikeway Design Manual, 1980

Figure 7-7 Stopping Sight Distance — Bikeways

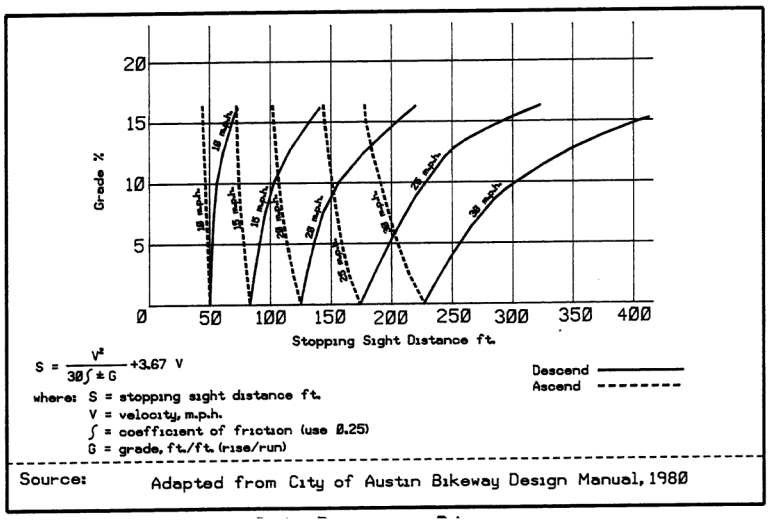

$$S = \frac{V^2}{30\int \pm G} + 3.67\ V$$

where: S = stopping sight distance ft.
V = velocity, m.p.h.
$\int$ = coefficient of friction (use 0.25)
G = grade, ft./ft. (rise/run)

Source: Adapted from City of Austin Bikeway Design Manual, 1980

Figure 7-8 Bikeway Sight Distance For Crest Vertical Curves

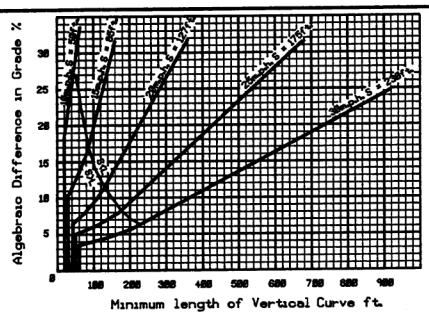

$$L = 2S\,\frac{200\left(\sqrt{h_1} + \sqrt{h_2}\right)^2}{A} \quad \text{when } S > L$$

$$L = \frac{AS^2}{100\left(\sqrt{h_1} + \sqrt{h_2}\right)^2} \quad \text{when } S < L$$

where: S = Stopping sight distance
A = Algerbraic difference in grade
h_1 = 4 ½ ft.- eye height ofcyclist
h_2 = ⅓ ft.- height of object
L = Minimum vertical curve length

Source: Adapted from City of Austin Bikeway Design Manual, 1980

12.6 SECTION 9

Figure 9-1 Parking Lot Design

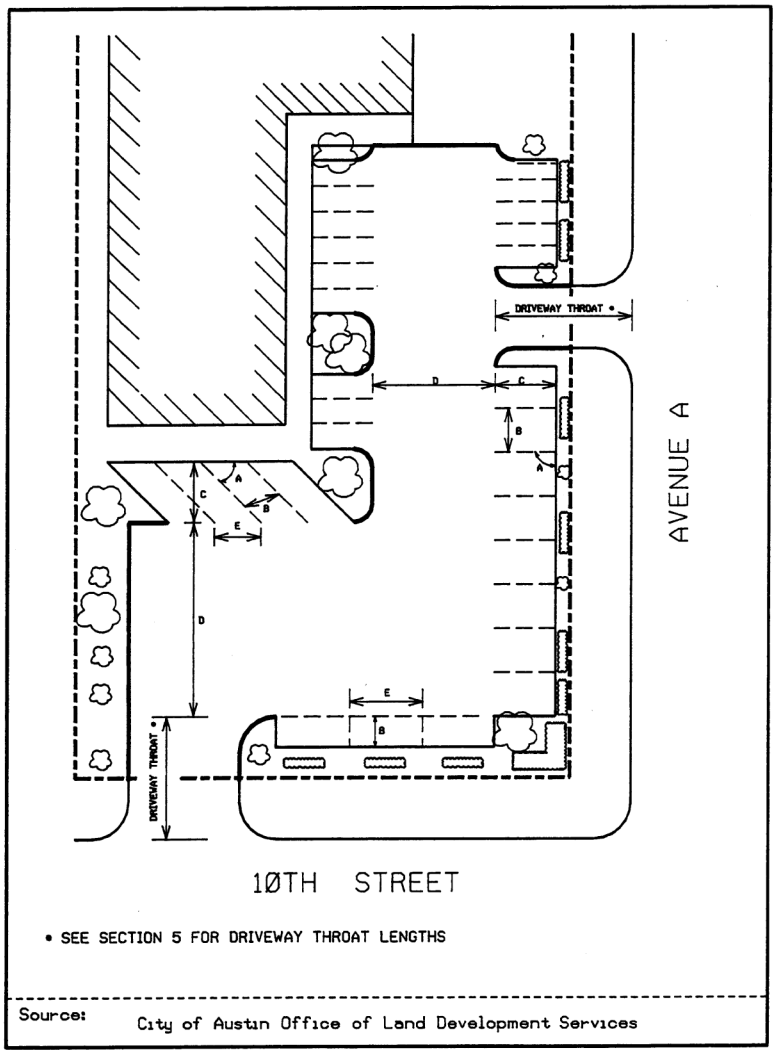

Source: City of Austin Office of Land Development Services

Figure 9-2 Fire Access Parking Lots

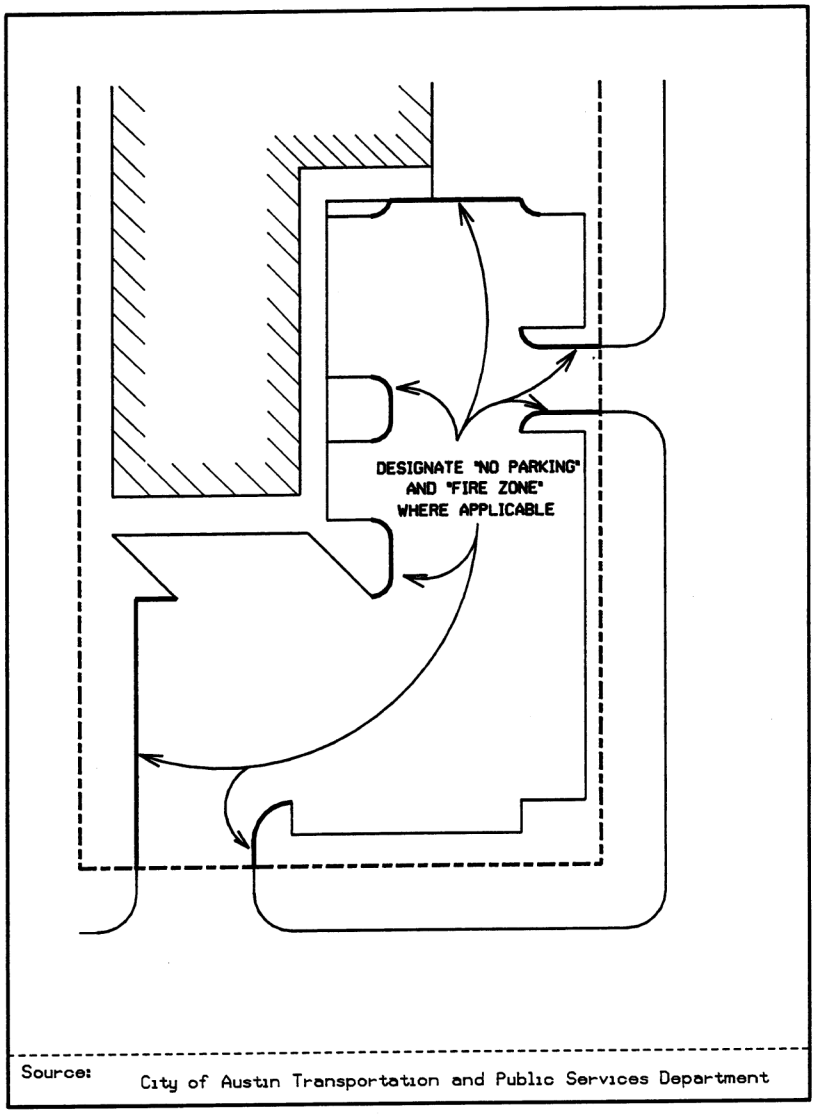

Figure 9-3 Use of Interior Planted Strips to Prevent High Speed Diagonal Movement

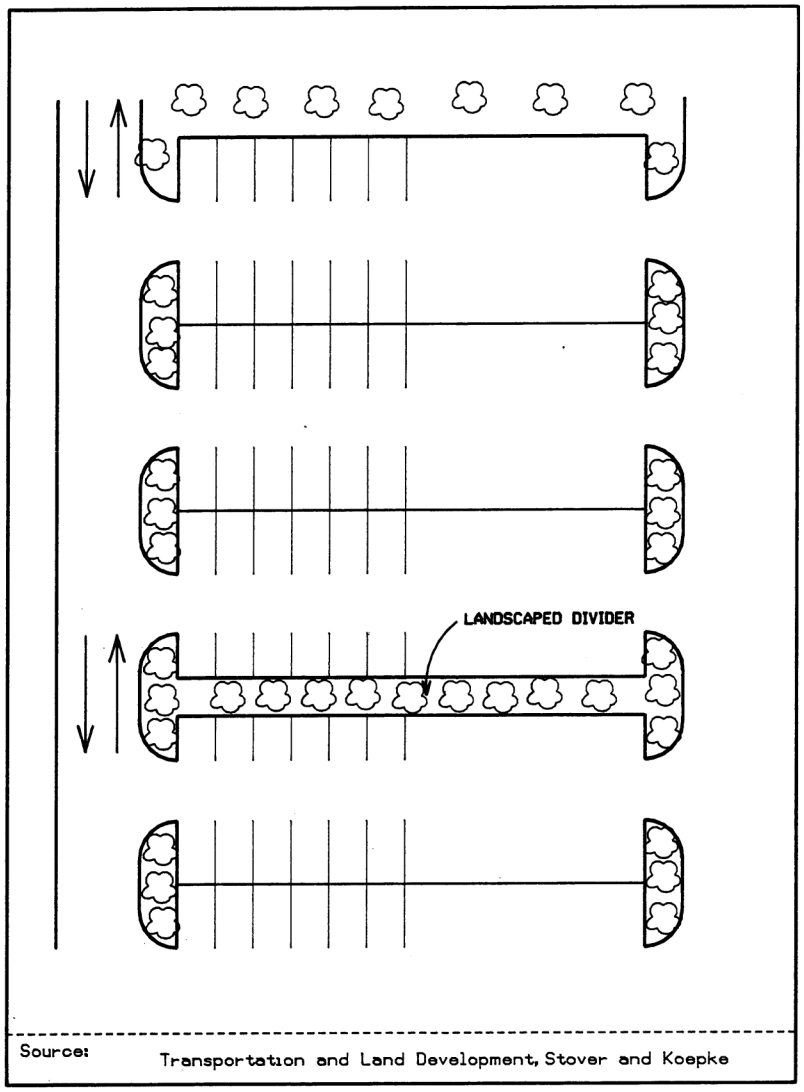

Figure 9-4 Curbed End-Islands Preclude Parking Within the Sight Triangle

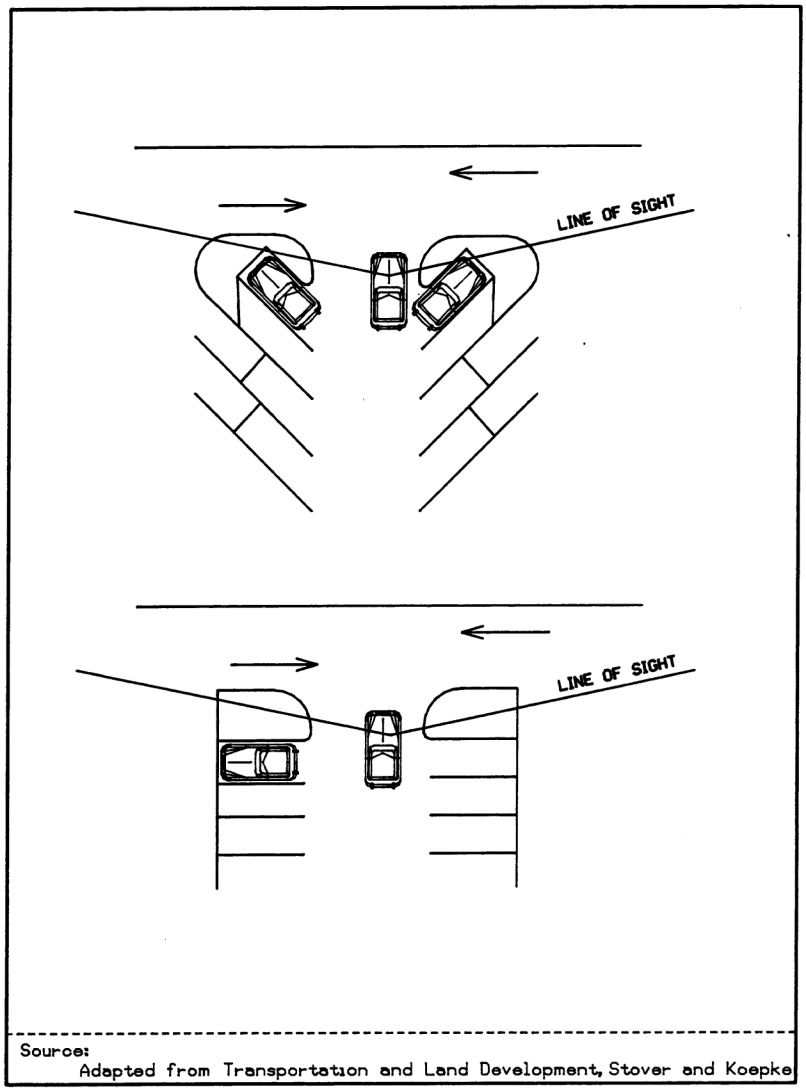

Source:
Adapted from Transportation and Land Development, Stover and Koepke

Figure 9-5 Typical End Island Designs for Ninety Degree Parking

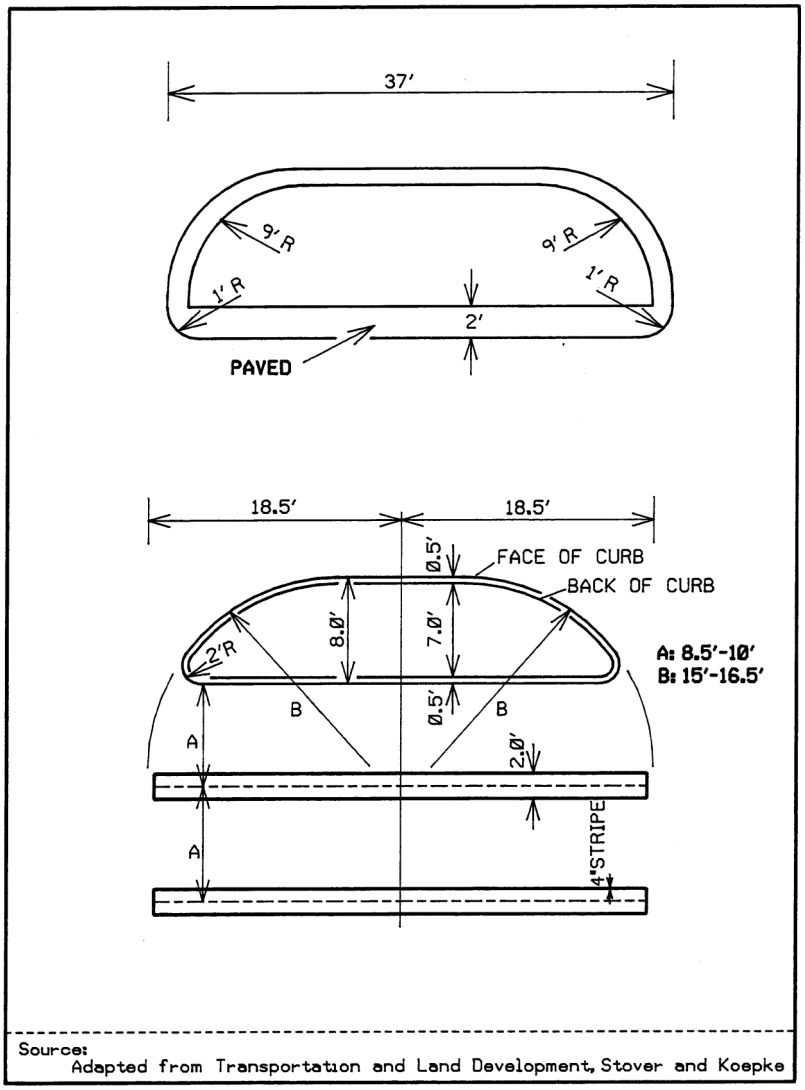

Source:
Adapted from Transportation and Land Development, Stover and Koepke

Figure 9-6 Typical End Island Designs for Sixty Degree Parking

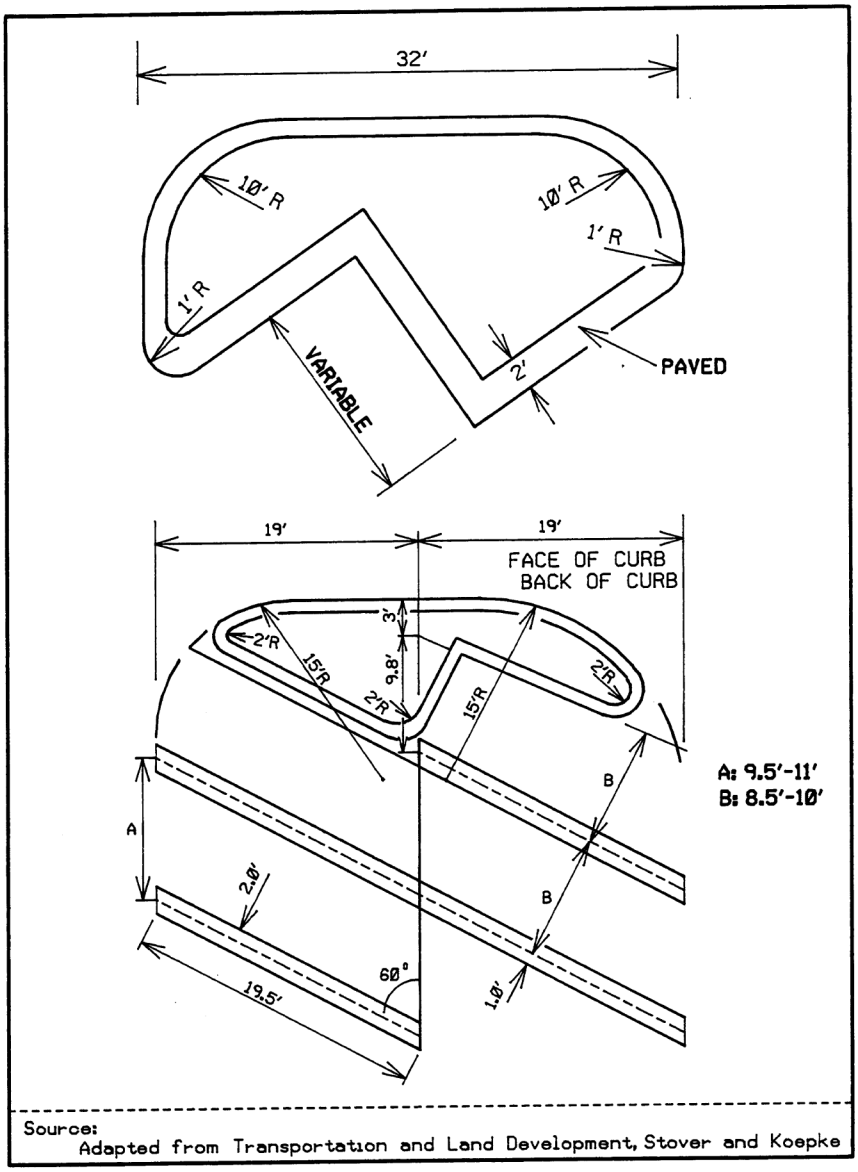

Figure 9-7 Loading Dock Dimensions

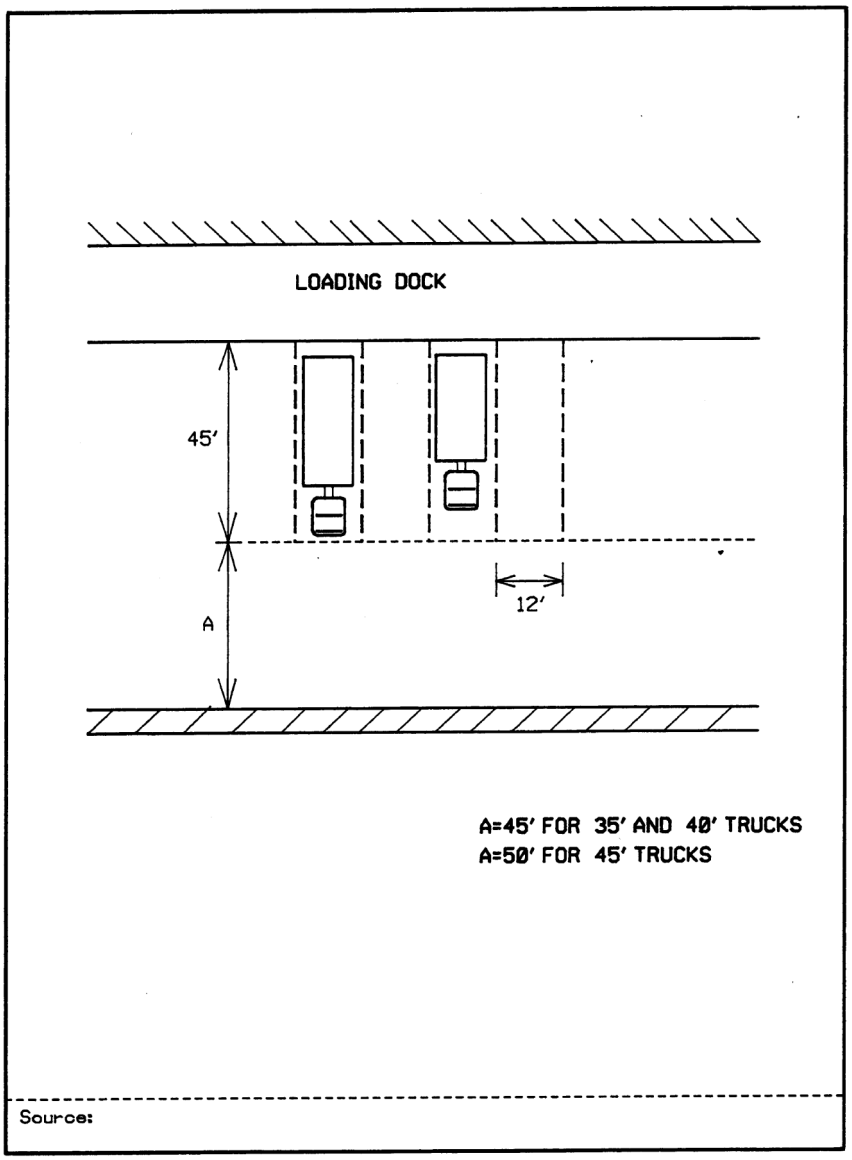

Source:

Figure 9-8 Service Station Queuing

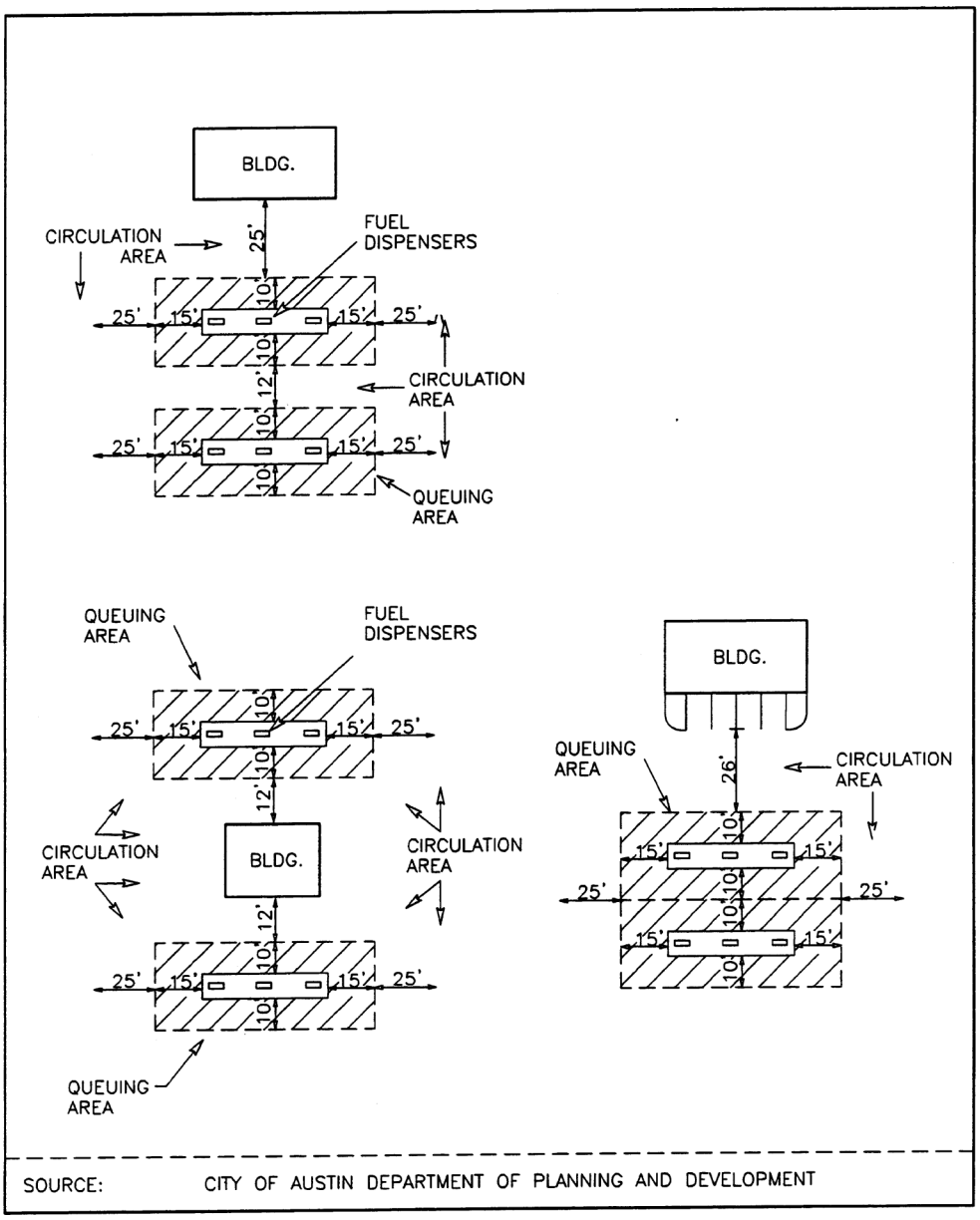

SOURCE: CITY OF AUSTIN DEPARTMENT OF PLANNING AND DEVELOPMENT
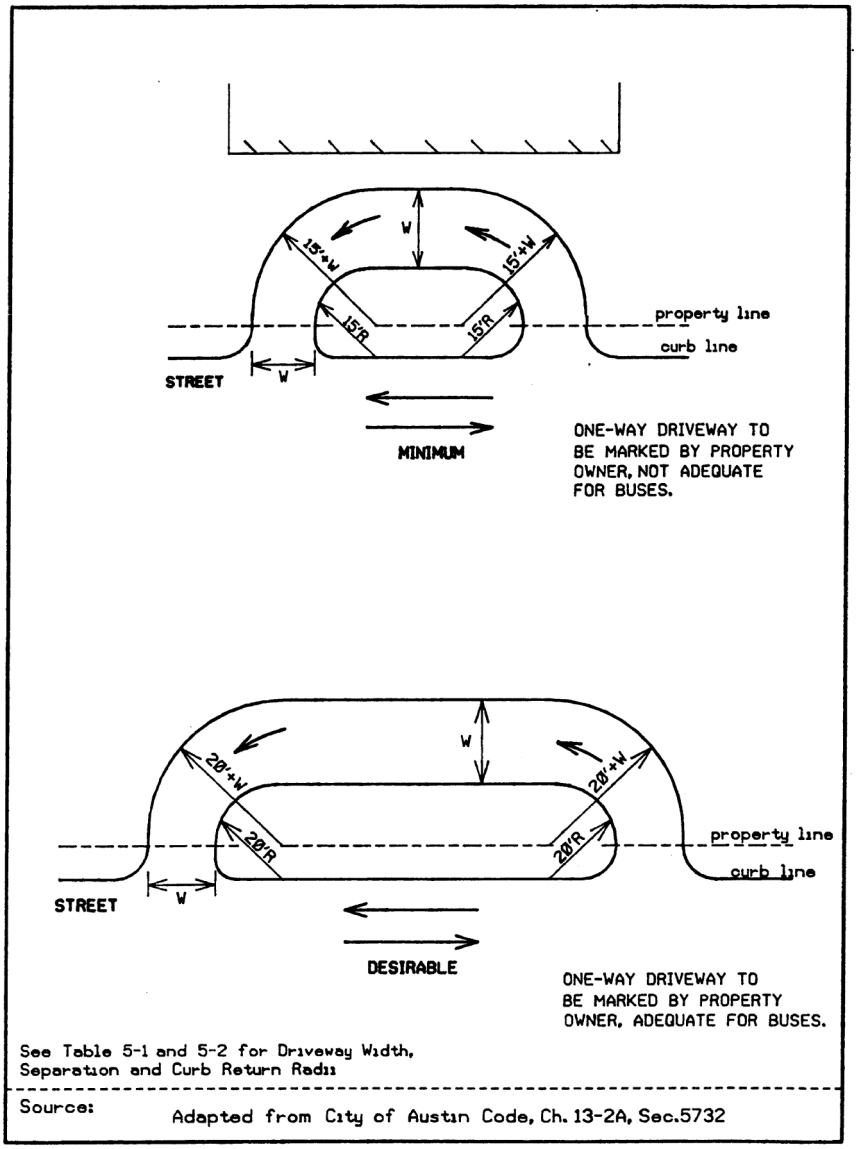
Figure 9-9 Design Criteria for Semicircular Drop-offs